PBMR NUCLEAR MATERIAL SAFEGUARDS

Johan Slabber
PBMR (Pty) Ltd, 2nd Floor Lake Buena Vista Building, Gordon Hood Avenue, Centurion 1267;
PO Box 9396, Centurion 0046, South Africa; Johan.Slabber@pbmr.co.za

ABSTRACT: The paper presents a brief technical description of the Pebble Bed Modular Reactor (PBMR) design. This technical description is presented in sufficient detail in order to serve as a basis for understanding the design of the fuel handling system and the reactor core.

In the section describing the core design and associated reactor physics, the lack of ability of the reactor to produce nuclear material for use in nuclear explosives is presented. It is shown that, with reference to plutonium production, the mixture of isotopes produced during normal commercial operation is unsuitable for use in nuclear explosives.

The approach that is currently proposed for the implementation of safeguards is based on nuclear material flow and inventory verification. A schematic diagram is included which summarizes the IAEA verification system interfacing with PBMR fuel handling and storage system.

The present status regarding high-temperature graphite moderated reactor reprocessing technology is briefly summarized.

Finally, a summary is presented of the non-proliferation attributes of the PBMR fuel cycle.

KEYWORDS: Non-proliferation, safeguards, nuclear material safeguards

1. INTRODUCTION

Safeguards is a technical means of verifying the fulfilment of political obligations undertaken by a State in concluding international agreements relating to the peaceful uses of nuclear energy. The objective is aimed at providing assurance to the international community that the State is complying with its non-proliferation and other peaceful use undertakings as per the Treaty for the Non-proliferation of Nuclear Weapons (NPT). The technical objective of safeguards in agreements concluded under the NPT is defined as ‘the timely detection of diversion of significant quantities of nuclear material from peaceful nuclear activities to the manufacture of nuclear weapons or of other nuclear explosive devices or for purposes unknown, and deterrence of such activities by the risk of early detection’.

The term ‘timely detection’ is related to the time required to convert diverted material into the components of a nuclear explosive device (namely conversion time). This conversion time is dependent on the type of nuclear material that is considered to be diverted. For low enriched material that is being considered for the fresh fuel of the PBMR, enrichment will be required for upgrading it to explosive usable material. For the spent fuel, which contains a mixture of plutonium isotopes, reprocessing will be required.

In order to fully understand the application of measures to support the implementation of nuclear material safeguards at PBMR, it is necessary to understand the reactor and those systems which support the handling of the fuel including the reactor core and the spent fuel storage.

2. TECHNICAL DESCRIPTION OF THE PBMR

The PBMR is a High-temperature Reactor (HTR) that uses helium as a coolant. The coolant drives the

turbo-machinery of the power conversion system directly in a Brayton thermodynamic cycle configuration. The power is 400 MWt/165 MWe (nominally).

This Main Power System is provided with a number of auxiliary systems that supply, service, and control the circulated gas; remove undesirable by-products; distribute power; condition the environment; and ensure safe conditions during normal or upset conditions.

The Reactor Unit consists of:

- The reactor pressure vessel
- The core structures which consist of
  - graphite reflectors supported by
  - the core barrel
- the control elements which are located in borings in the outer and central reflectors.

The annular core cavity is formed by a 2 m diameter central reflector, and a 3.7 m inner diameter outer reflector. The active length of the core is 11 m. The outer reflector is 0.9 m thick.

The fuel is in the form of spheres with a nominal diameter of 60 mm. *FIGURE 11* gives the detail of the design of a typical fuel sphere. The heavy metal loading per fuel sphere is 9 g, irrespective of the required enrichment.

Before the initial approach to criticality, the core cavity is filled with graphite spheres. The loading to criticality of the start-up core and any other reloading of the core will be done on top of this graphite bed. The start-up fuel will have an enrichment lower than the equilibrium fuel (present best estimate is 5.7%). In addition, the start-up core will contain a mixture of fuel and graphite spheres in a ratio of fuel:graphite 1:1 (present estimate). While loading this fuel and graphite mixture, graphite spheres will be unloaded from the core and the excess graphite spheres routed to the graphite storage tank. The present estimate is that at cold criticality the active core volume will be filled to about 80% of its active volume. Nuclear heating will be applied, and it is estimated that the core cavity should be full at hot conditions, with some fission products in the core. As more fission products are generated, the fuel and graphite mixture will be enriched by a net removal of graphite spheres. This will be continued until all the graphite spheres have been removed, whereafter equilibrium fuel will be loaded when a start-up fuel sphere is removed.

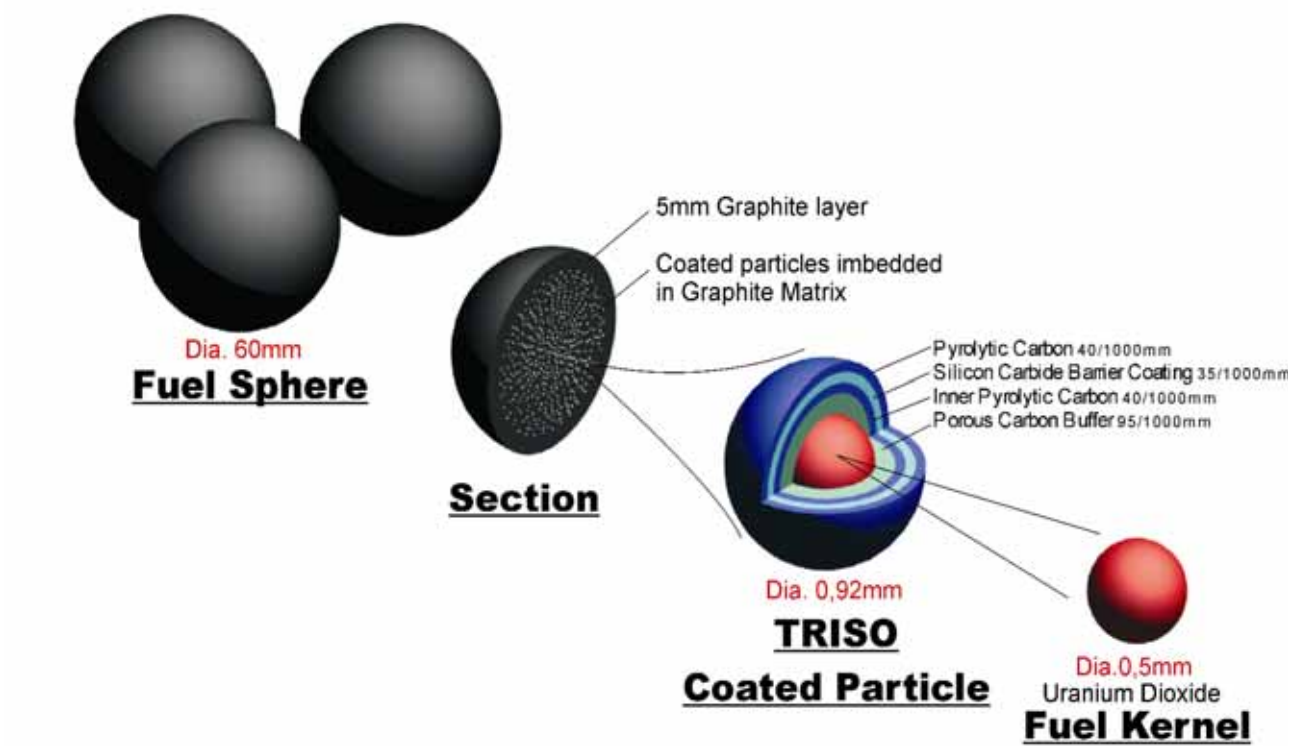

FIGURE 1. The PBMR fuel sphere.

The core contains nominally 452 000 spheres, and loading is done on-line. Fuel is introduced into the core through three lines at the top of the reactor, and is extracted from the reactor through three de-fuelling chutes at the bottom. Each of the de-fuelling chutes leads into a Core Unloading Device (CUD) where the spheres are singularized and the spheres that are broken, damaged or have too small a diameter are removed from the lines. Following discharge from the CUD, a gross gamma activity measurement is done to identify whether it is a graphite or fuel sphere. This facility is mainly used during the period where the core contains both fuel and graphite spheres. After the sphere type is identified by the gross gamma activity count, the spheres are transported pneumatically to the top of the reactor, where each fuel sphere is assayed for burn-up. After the burn-up is determined, the fuel is either routed to the reactor or discharged to the spent fuel tanks.

It is also possible to unload all the core fuel should it become necessary. A used fuel tank is available to contain an entire core inventory of used fuel. When a core needs to be unloaded into the used fuel tank, the core cavity is back filled with graphite spheres, unless work such as replacement of damaged reflector front sections needs to be done on the reflectors, in which case the core cavity is left empty. The reason for back filling with graphite spheres is to allow for a short fuel sphere drop distance on reloading the core from the used fuel storage tank. Following reflector replacement, however, the core cavity will first be filled with graphite spheres using a separate device, whereafter the core fuel will be reloaded onto this bed. Each such reloading of the core will be carried out using the approach to criticality methodology.

The Fuel Handling and Storage System (FHSS) is used to do all the fuel handling operations. *FIGURE 22*, *FIGURE 33*, *FIGURE 44*, *FIGURE 55*, *FIGURE 66* and *FIGURE 77***FIGURE** show in a schematic format the fuel handling and storage system operation during all the above-mentioned modes of operation.

3. THE PBMR CORE

To accumulate its design burn-up, a fuel sphere at equilibrium core conditions traverses the core on average six times.

TABLE 11 is a summary of the important core parameters related to the application of nuclear material safeguards to the PBMR.

TABLE 1. General Results for the Equilibrium Cycle.

Description	Units	Value
Average residence time in core	Days	~ 923
Average discharge burn-up	MWd/t	90 800
Number of Fuel Spheres (FS)		~ 452 000
Average number of fresh fuel spheres to be loaded per day		~ 489
Average number of fuel spheres recirculated per day		~ 2 936

The plutonium mix after each of the six cycles of a fuel element through the core is given in *FIGURE 88***FIGURE** .

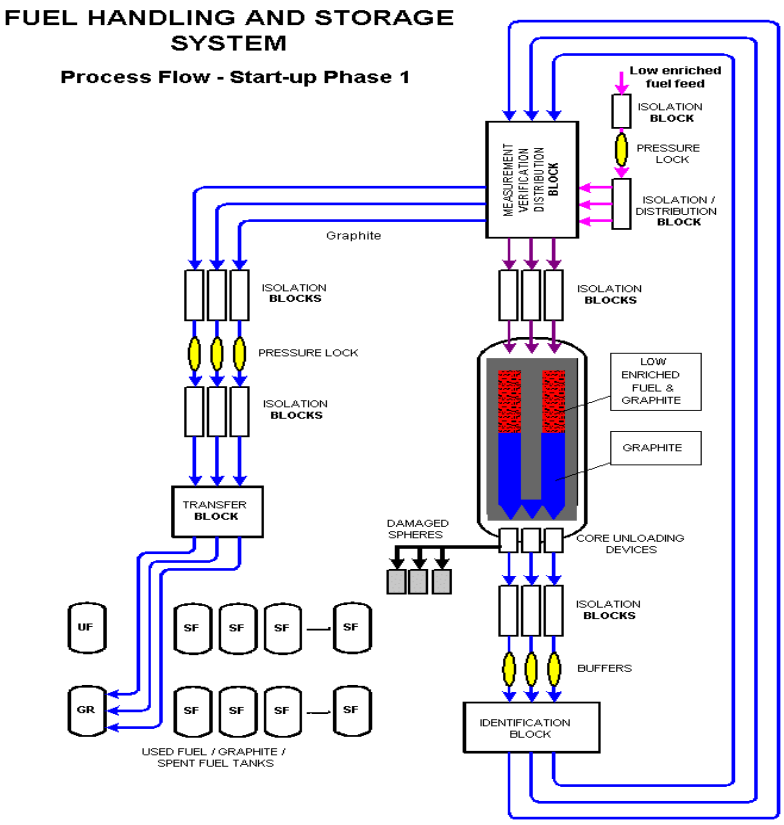

FIGURE 2. Initial approach to criticality loading.

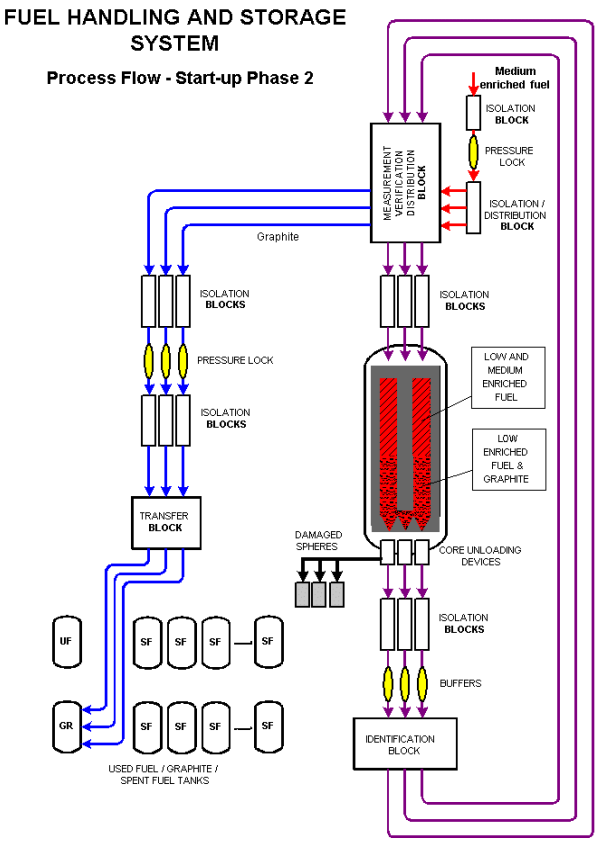

FIGURE 3. Transition to core containing only fuel.

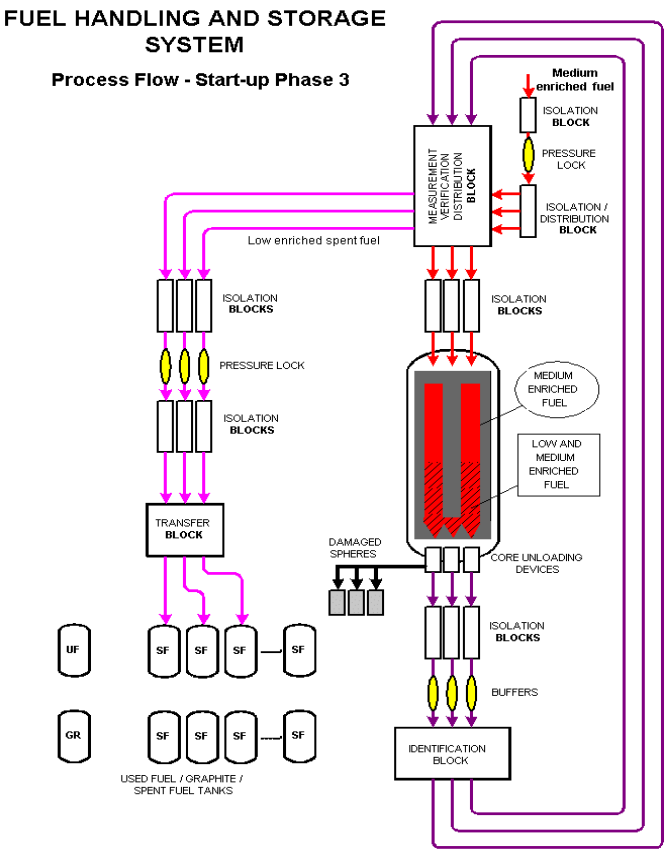

FIGURE 4. Transition to equilibrium core.

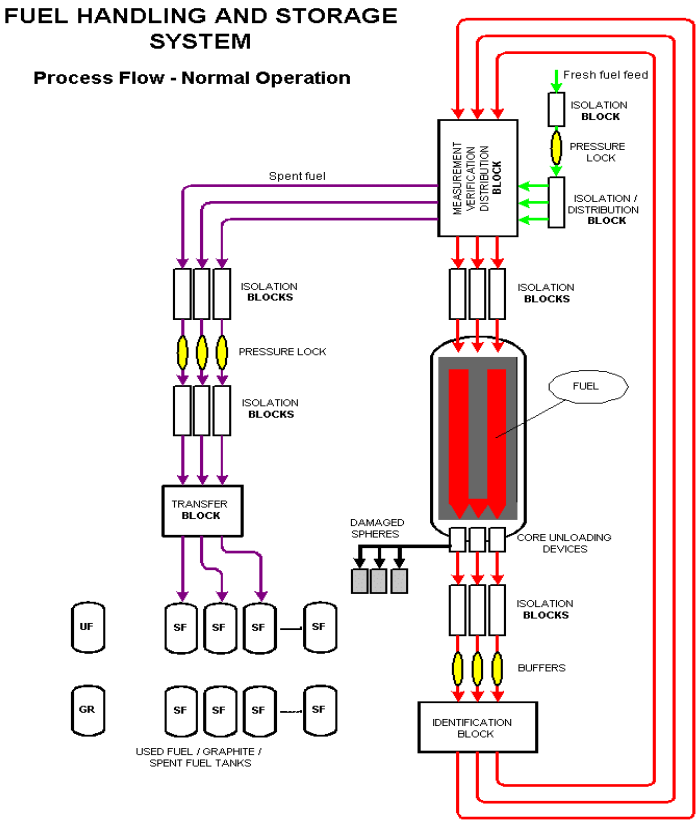

FIGURE 5. Fuel handling during normal operation.

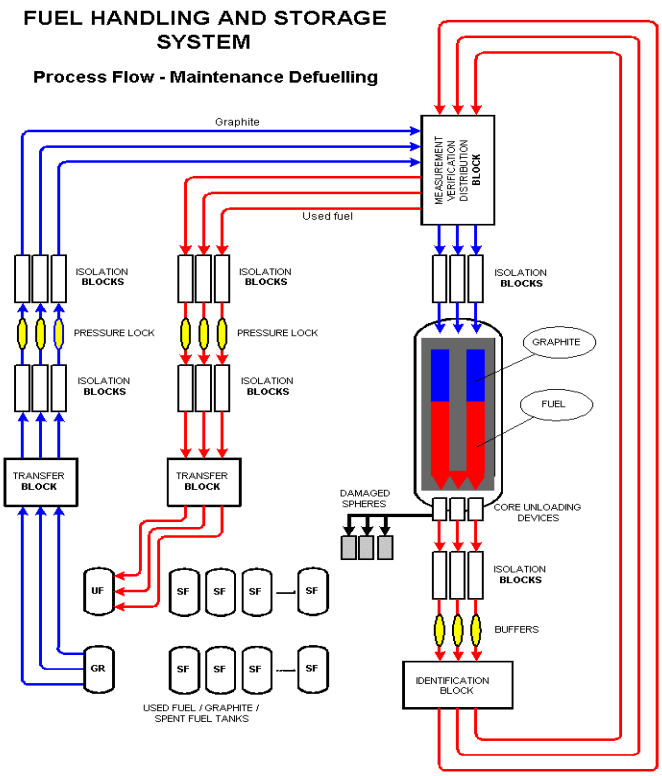

FIGURE 6. Core unloading and backfilling with graphite.

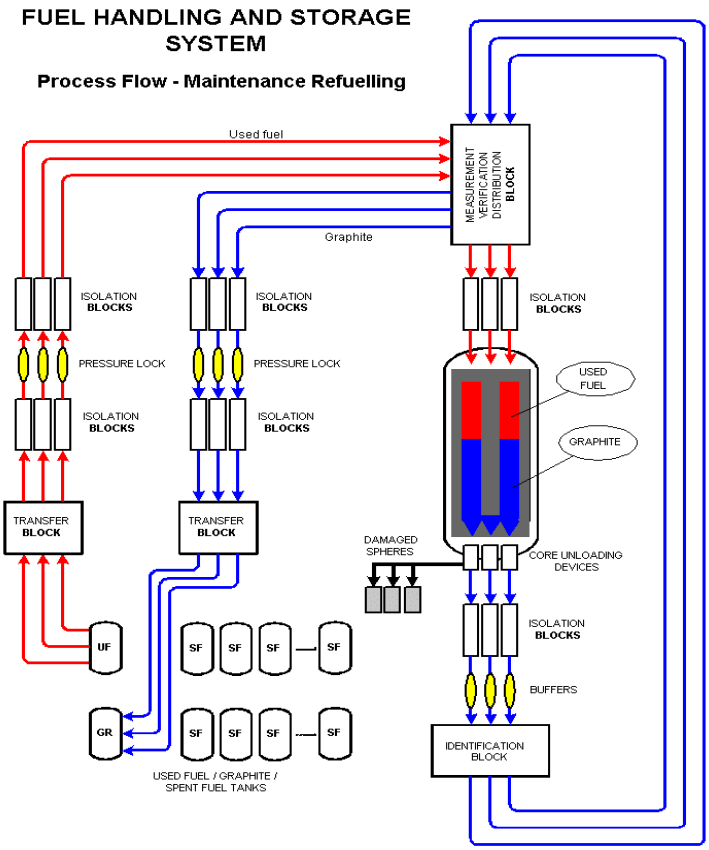

FIGURE 7. Core reloading and unloading of graphite.

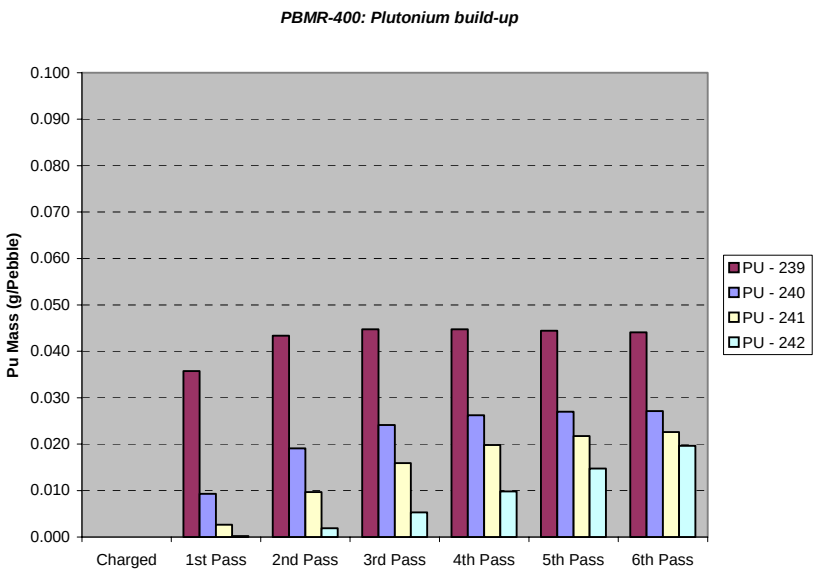

FIGURE 8. Plutonium build-up in a PBMR fuel element in an equilibrium core.

4. NUCLEAR MATERIAL SAFEGUARDS PLAN FOR PBMR

4.1. General

The verification of nuclear material at a nuclear facility is to provide confirmation of the inventory declaration by the PBMR operator, by means of independent means. This will involve actions such as the physical counting of items and the confirmation that the items contain nuclear material as declared. Obviously, even in small facilities, the number of items could be large, and the above-mentioned activities could be time-consuming. To avoid this, sampling is done in a prescribed way with a certain detection probability, and the required item identification and nuclear characterization are then carried out on the selected samples.

The above-mentioned activities, in the case of the PBMR, are only possible for the verification of the fresh fuel. Once the fuel is loaded into the core and fission products are produced, direct access to the fuel, due to the design of the core, becomes impossible. Other methods will therefore have to be employed. It is anticipated that the core will possibly be designated by the IAEA as Difficult-to-Access, in which case the access routes or openings to or from the core have to be sealed, in conjunction with surveillance cameras providing a dual function. Most probably an authenticated IAEA fuel counting system (fuel flow measurements) instead of the sealing system will also be acceptable. This is presently being negotiated with the IAEA.

To some extent the same is true for the spent fuel. However, this system is presently designed to provide an IAEA authenticated fuel counting system (fuel flow measurements) for the spent fuel discharged into the spent fuel tanks. In addition, a facility is provided, by means of which any of the tanks could be verified for the presence of plutonium via a multi-channel detector system inserted into a special access tube. Three tubes are provided for each tank, and when not in use, these tubes will be sealed with an IAEA sealing system.

From a nuclear material safeguards perspective, the flow of fuel and or graphite spheres to and from the core and the net removal of graphite spheres and loading it into the graphite storage tanks shall be monitored with flow monitoring at specific points in the system.

4.2. Physical Inventory Verification

The Physical Inventory Verification (PIV) will be carried out at yearly intervals, and the verification activities will be as follows:

4.2.1. Fresh fuel

For the fresh fuel, the containers will be counted and some containers will be selected on a random basis with a medium detection probability for Non Destructive Assay (NDA) measurements to confirm the presence of nuclear material.

4.2.2. Core fuel

For the core fuel, possibly designated by the IAEA as Difficult-to-Access, verification by evaluation of the seals and the fuel flow measurements and surveillance measures employed.

4.2.3. Spent fuel

For the spent fuel it may be more appropriate to use the access tubes for NDA verification as described above. In this case, tank(s) will then be selected on a random basis with medium detection probability for verification by NDA measurements to confirm that no unrecorded removal of nuclear material took place.

4.2.4. Damaged fuel spheres

Damaged fuel spheres will be separated in the Core Unloading Device (CUD) and stored in a cavity specially designed for this purpose and provided for in the CUD. This material will be removed from this storage during a reactor outage and moved to a more permanent high-level storage specially designed for this purpose. Access to this storage is sealed with IAEA seals and the access is under surveillance. In addition, access tubes are provided for the insertion of NDA equipment similar to the methodology proposed for the spent fuel tanks.

4.2.5. Fuel spheres removed for research purposes

A facility is provided where fuel spheres can be removed from the FHSS for non-destructive and destructive research. These fuel spheres will be unloaded from the FHSS into a shielded container in a specially designed cell. Access to this cell will be sealed with IAEA seals and the cell will be under IAEA surveillance.

4.3. Schematic Diagram of Safeguards Support Measures

*FIGURE 99*FIGURE is a schematic diagram, which provides an integrated presentation of the safeguards support measures to be employed in the PBMR demonstration power plant.

5. STATUS OF THE HTR FUEL REPROCESSING TECHNOLOGY

The difficulties of reprocessing of HTR spent fuel are mainly associated with the nature of its constituents. The graphite and the silicon carbide are practically chemical inert compounds, and few chemical reagents are capable of dissolving them quantitatively and effectively [1]. Methods for reprocessing HTR spent fuel elements have been developed in the past. These methods incorporated combinations of thermal, chemical and mechanical processes. However, none of these processes has ever reached a large-scale (commercial) status, both for political and economical reasons. Since reprocessing is technically feasible, it could become the method of choice in case of limited supply of uranium and/or thorium.

6. NON-PROLIFERATION ATTRIBUTES OF PBMR

The following is a summary of the non-proliferation attributes of the PBMR design.

- Low enriched fuel is used.
- A closed system for fuelling and de-fuelling with on-line tracking of fuel or graphite sphere location. This reduces the possibility of clandestine introduction of target material or the protracted diversion of core nuclear material.
- Only sufficient excess reactivity is allowed to cater for temperature effects and to provide for equilibrium and transient fission product poisoning, the latter occurring during load following operation. The clandestine introduction of neutron absorbing target material into the core will upset this reactivity balance and will have a noticeable effect on the core physics [2].
- The PBMR is designed to store all the spent fuel generated during the operational lifetime of the reactor in the facility.
- Should reprocessing become a viable option, the high burn-up achieved by the PBMR fuel produces a mix of plutonium isotopes that does not favour the production of a reliable nuclear explosive device. In addition, the heat generated by these isotopes will cause rapid degradation of the high explosive components of such a device.

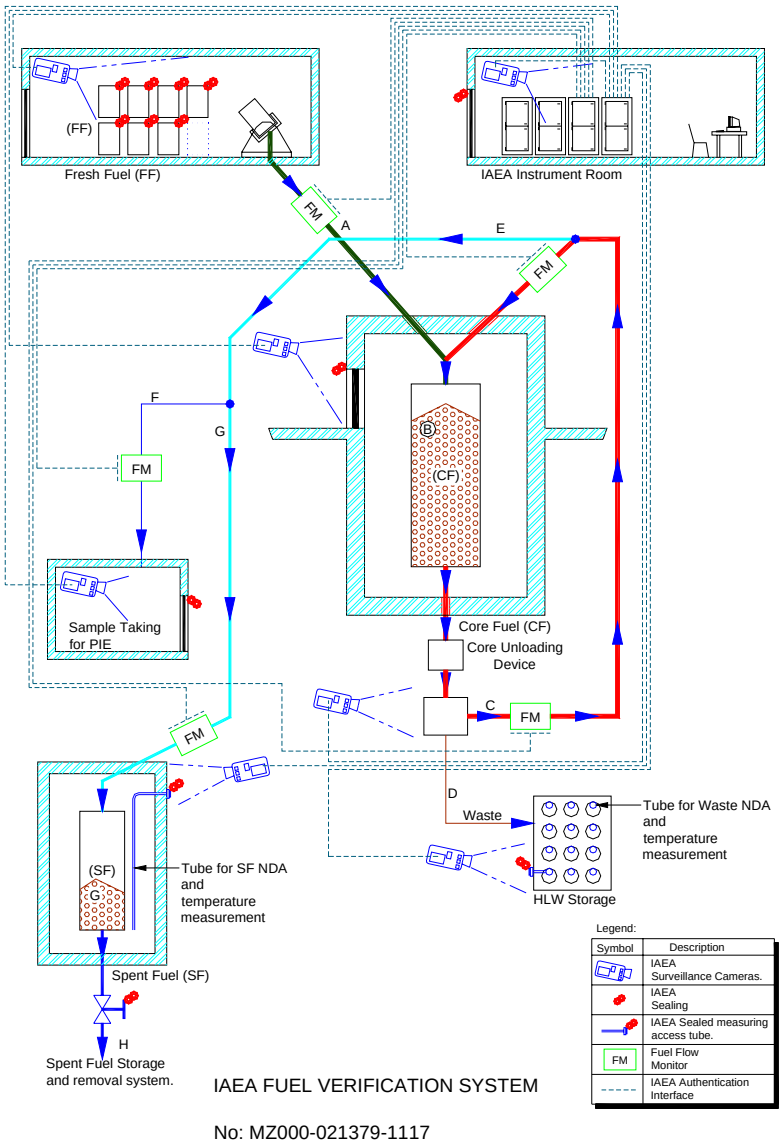

FIGURE 9. Schematic of proposed IAEA support measures for the application of safeguards at PBMR.

7. CONCLUSION

The PBMR is a very unattractive facility for the production of weapons grade fissile material. In addition to this inherent feature, the implementation of nuclear material safeguards has been an integral part of the PBMR design from the start of the project. The measures to support this objective have been incorporated into the design both to assist the operator of the facility and the IAEA.

ACKNOWLEDGEMENT

The author wishes to express his appreciation to PBMR (Pty) Ltd for allowing publication of this document.

REFERENCES

[1] The Reprocessing Issue for HTR Spent Fuels. D Greneche and P Brossard. Proceedings of ICAPP 04. Pittsburgh, PA USA, June 13-17, 2004.

[2] Preliminary Assessment of the Ease of Detection of Attempts at Dual Use of a Pebble Bed Reactor. A M Ougouang and H D Gougar. Presentation at the American Nuclear Society 2001 Winter Meeting. Reno, Nevada. November 11-15, 2001.

AUTHOR INTRODUCTION

The author is currently employed by the company PBMR (Pty) Ltd, in the capacity of Senior Nuclear Consultant.