Conf-910879--1

GA-A20543

Received by OSTI
JUL 0 8 1991

350 MW(t) MHTGR PREASSEMBLY AND MODULARIZATION

by
M.C. VENKATESH, G. JONES, D.A. DILLING, and W.J. PARKER

MAY 1991

MASTER

GENERAL ATOMICS

DISTRIBUTION OF THIS DOCUMENT IS UNLIMITED

DISCLAIMER

Portions of this document may be illegible in electronic image products. Images are produced from the best available original document.

DISCLAIMER

This report was prepared as an account of work sponsored by the United States Government. Neither the United States Government nor any agency thereof, nor any of their employees, makes any warranty, express or implied, or assumes any legal liability or responsibility for the accuracy, completeness, or usefulness of any information, apparatus, product, or process disclosed, or represents that its use would not infringe privately owned rights. Reference herein to any specific commercial product, process, or service by trade name, trademark, manufacturer, or otherwise, does not necessarily constitute or imply its endorsement, recommendation, or favoring by the United States Government or any agency thereof. The views and opinions of authors expressed herein do not necessarily state or reflect those of the United States Government or any agency thereof.

GA-A--20543

DE91 014845

GA-A20543

350 MW(t) MHTGR PREASSEMBLY AND MODULARIZATION

by

M.C. VENKATESH,* G. JONES,† D.A. DILLING,‡ and W.J. PARKER§

This is a preprint of a paper to be presented at the Third International Seminar on Small and Medium-Sized Nuclear Reactors, August 26-28, 1991, New Delhi, INDIA, and to be published in the Proceedings.

Work supported by
U.S. Department of Energy
Contract DE-AC03-895F17885

* General Atomics
† Gas Cooled Reactor Associates
‡ Bechtel National Inc.
§ Stone & Webster Corporation

GA PROJECT 7600
MAY 1991

MASTER

GENERAL ATOMICS

DISTRIBUTION OF THIS DOCUMENT IS UNLIMITED

350 MW(t) MHTGR PREASSEMBLY AND MODULARIZATION

M. C. VENKATESH
[General Atomics, San Diego, U.S.A.]

G. JONES
[Gas Cooled Reactor Associates, San Diego, U.S.A.]

D. A. DILLING
[Bechtel National Inc., San Francisco, U.S.A.]

W. J. PARKER
[Stone & Webster Engineering Corp., Boston, U.S.A.]

Abstract

The Modular High Temperature Gas Cooled Reactor (MHTGR) provides a safe and economical nuclear power option for the world's electrical generation needs by the turn of the century. The proposed MHTGR plant is composed of four 350 MW(t) prismatic core reactor modules, coupled to a 2(2x1) turbine generator producing a net plant electrical output of 538 MW(e). Each of the four reactor modules is located in a below-ground level concrete silo, and consists of a reactor vessel and a steam generator vessel interconnected by a cross duct vessel. The modules, along with the service buildings, are contained within a Nuclear Island (NI). The turbine generators and power generation facilities are in the non-nuclear Energy Conversion Area (ECA). The MHTGR design reduces cost and improves schedule by maximizing shop fabrication, minimizing field fit up of the Reactor Internals components and modularizing the NI & ECA facilities.

---

*This is a report of work sponsored by the U. S. Department of Energy under Contract No. DE-AC03-89SF17885

CONTENTS

Abstract iii
1. Introduction 1
2. General Requirements 3
3. MHTGR Modularization 5
4. Conclusion 18
5. Acknowledgments 19
6. References 20

Figures

1. Sequence of modularization design activities 2
2. MHTGR schematic plot plan 6
3. Reactor internals - elevation view 7
4. Nuclear Island key plan 12
5. Isometric view through Reactor Building 13
6. Reactor head access area plug 14

Table

1. Module size/weight envelope 4
2. Module estimating parameters 15

1. INTRODUCTION

1.1 Overall Design Approach

Modularization is defined as the preassembly of equipment items into shippable modules that will later be transported into place at the plant site. In some instances, this preassembly could take place at the plant site, as in the case of assembly and installation of reactor core internals. In the case of the NI & ECA, the shippable modules may be of a specific type or a combination of several types such as the backbone, zone, system and/or formwork/reinforcing modules. The content and location of these modules will be determined with the specific objective of assuring that the overall plant layout has been optimized from the point of view of modularization. When appropriate, computer aided methods will be used to facilitate the design of modules. The sequence of modularization design activities is shown in Figure 1.

1.2. Objectives

The benefits of Modularization on projects such as the MHTGR will help to re-establish the role of nuclear power in the world. The key areas of modularization where benefits can be obtained are in shortening schedules, reducing schedule risks, reducing costs, and improving quality and safety. The ability to perform work on multiple modules in parallel rather than in series, and to perform offsite assembly and testing, provides an opportunity to enhance schedule performance and reduce schedule risks. The transfer of work from site to a fabrication shop or an assembly shop reduces labor and material costs and improves quality and productivity.

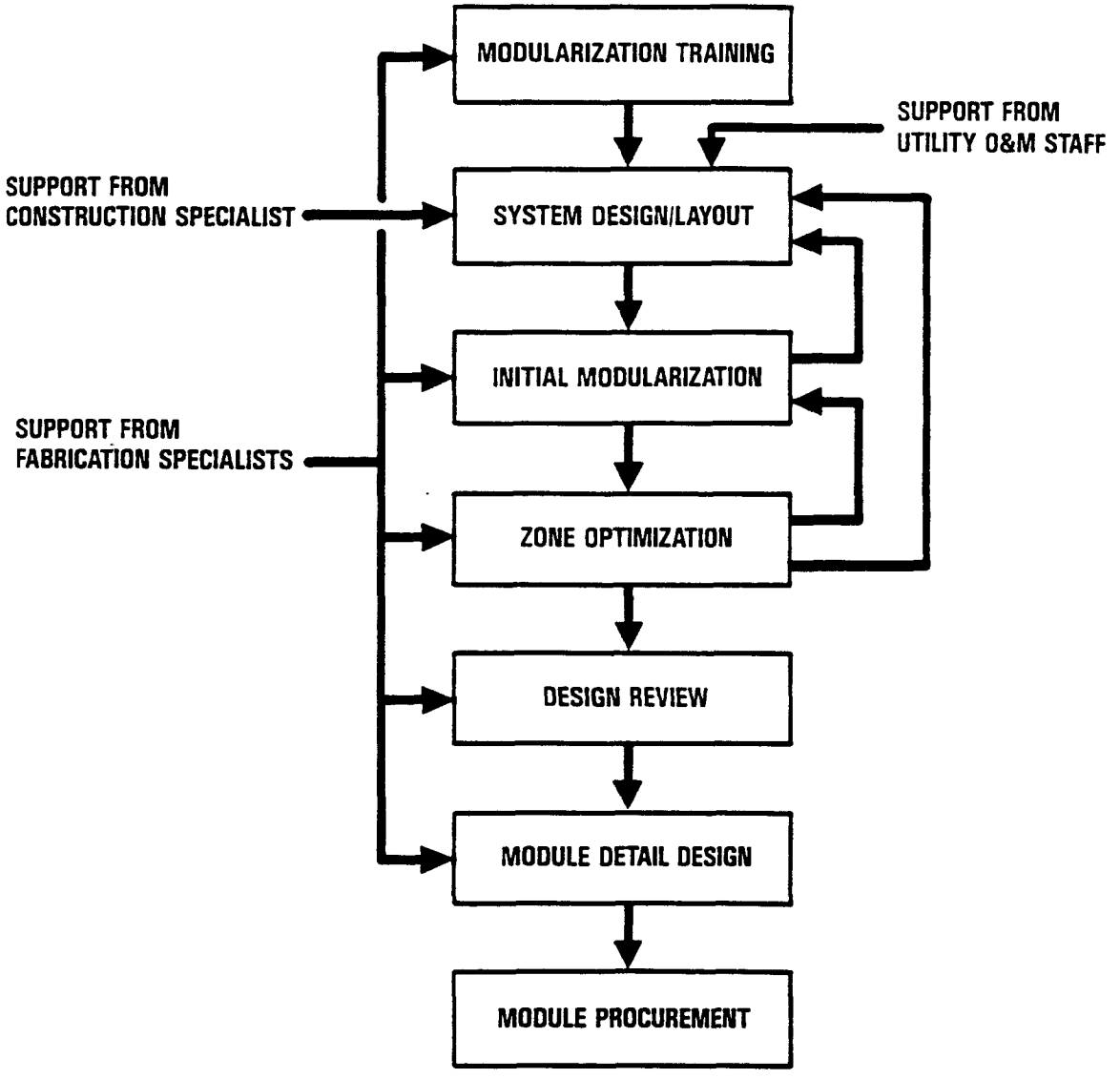

FIG. 1. Sequence of modularization design activities

2. GENERAL REQUIREMENTS

2.1. Application to MHTGR Project

For the MHTGR project to successfully implement modularization, all project organizations, from engineering through procurement to construction, will have to be trained to think in terms of procurement by modules rather than by equipment item. A description of a sample module is shown below.

Module Name	Helium Purification Module
Overall Size	3.7m x 3.7m x 15m (12 ft x 12 ft x 50 ft)
Gross Shipping Weight	25 metric tons (27.6 tons)
Contents	Helium purification, Heating & ventilation
Site Delivery Date	January 1, 1997
Fabricator	XYZ Co

A project modularization plan that assigns responsibilities and schedule for approval and release of module drawings, material and equipment procurement, module assembly, shipment, and site installation will be developed.

2.2. Transportation

The design and overall envelope of modules will be determined by the size limits imposed by the rail/road transport. The majority of the modules will be designed to be within the maximum envelope and maximum weight permitted for standard rail/road transport. Special sizes such as the Reactor Vessel and metallic core support components will be reviewed on a case by case basis considering added transportation cost, critical

path impact, individual component size requirements and repeatability of the module design. Table 1 below shows module size and weight limitations for the standard and special methods of transportation by road/rail.

Table 1. Module Size/Weight Envelope

TRANSPORT CLASS	TRUCK (FLATBED)			RAIL (FLAT CARS)		
	STANDARD	SPECIAL	OVERSIZE	STANDARD	SPECIAL	OVERSIZE
MODULE SIZE (W x H x L)	2.6 x 2.9 x 14.6 (8.5 x 9.5 x 48)	4.3 x 3 x 15.2 (14 x 10 x 50)	6.7 x 6.7 x 30.5 (22 x 22 x 100)	3.25 x 3.35 x 18.3 (10.67 x 11 x 60)	4.6 x 4.9 x 27.1 (15 x 16 x 89)	6.7 x 6.7 x 38.1 (22 x 22 x 125)
MODULE WEIGHT	18.2 (20)	27.3 (30)	1090.9 (1200)	673.2 (75)	272.7 (300)	727.3 (800)

NOTE: DIMENSIONS ARE IN METERS AND METRIC TONS.
(FEET AND LONG TONS IN PARENTHESIS)

3. MHTGR MODULARIZATION

The design and development process of the MHTGR modularization is divided into three major categories as follows.

- Reactor Internals fabrication and preassembly
- Nuclear Island Modularization
- Energy Conversion Area Modularization

Figure 2 illustrates a schematic plot plan of the proposed four-module MHTGR plant with the above three major areas of modularization highlighted.

3.1. Reactor Internals Fabrication and Preassembly

The major components of the reactor module (vessels, heat exchanger and helium circulators) are factory fabricated and shipped to the site for installation. However, for the reactor internal components, the option of onsite assembly or preassembly exists. That is, the graphite and the metallic reactor internals shown in Figure 3 may be individually assembled within the reactor vessel after it is installed in the reactor building silo or preassembled outside the reactor vessel onsite.

The metallic components are the metallic core support (MCS), plenum elements, upper plenum shroud and hot duct assembly. The MCS consists of core barrel, vertical coolant channels, upper restraint shear keys for lateral support and a horizontal support structure at the lower end of the core barrel which supports the graphite core. The graphite components are the fuel and reflector elements, permanent side reflector elements (PSR), graphite core support structure (GCS) and lower plenum

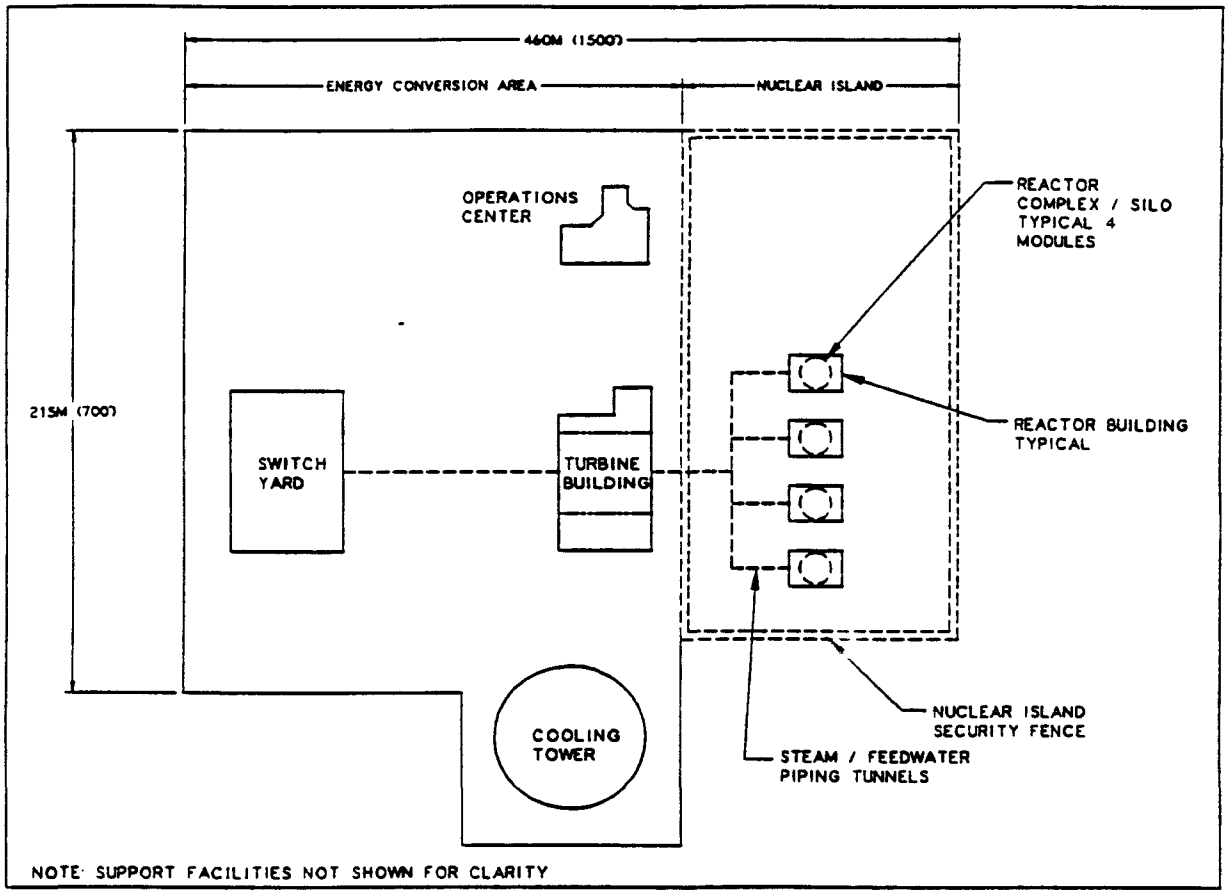

FIG. 2. MHTGR schematic plot plan

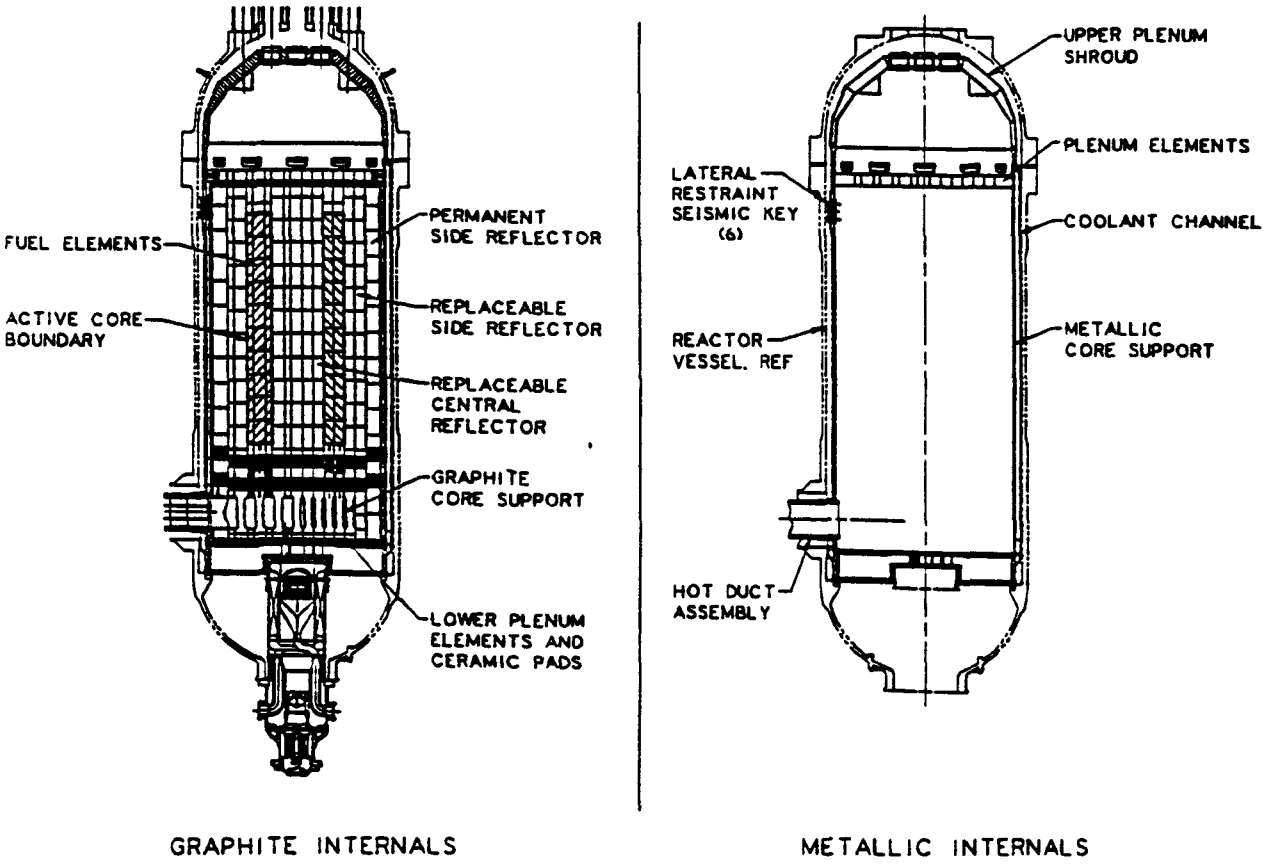

FIG. 3. Reactor internals - elevation view

elements and ceramic pads. The Reactor Internal components are enveloped by the MCS which is approximately 6m (19.5 ft) in diameter 13.7m (45 ft) long and weighs about 270 m. tons (298 tons). The graphite components are vertically supported and horizontally restrained by the MCS. The components being reviewed for the onsite preassembly are:

- Metallic Core Support
- Permanent Side Reflector elements
- Top Plenum Elements
- Fuel and reflector elements
- Graphite Core Support
- Lower plenum elements and ceramic pads

In considering preassembly of the internals, the following factors are reviewed:

- Maximizing component fabrication and prefitting at the manufacturing facilities.
- Transportation constraints including acceleration loads during shipping
- Preassembly at an onsite facility
- Tolerance requirements and effects on manufacturing methods
- The sequence of assembly
- Constraints on total weight to be lifted during site installation

The above approach meets the modularization objectives by simplifying design methods and performing more shop fabrication and onsite preassembly. The following approach to preassembly of the reactor internals will be considered.

- The MCS consisting of core barrel, coolant channels, seismic keys and horizontal support structure, is fabricated at a

manufacturing facility. The core barrel will be fabricated as rolled to ±6mm (1/4 in.) tolerance. The horizontal support structure at the lower end of the core barrel also provides lateral support during transportation. Additional temporary internal bracing and spiders will be used as necessary. Because of the component size, special transportation similar to reactor vessel transportation is required.

- All the graphite components are separately procured, shop fabricated from the billets including the PSRs. The metallic top plenum elements are also shop fabricated. These components are shipped by standard rail/road transportation means.

- The MCS is set up in the preassembly area as close to the Reactor Building silo as possible and the internal surfaces of the core barrel are surveyed for unevenness that may have resulted during fabrication and/or transportation. A digital tape is made with this information and sent to the PSR fabricator for proper match of the PSR surface with the inside surfaces of the core barrel.

- In the preassembly area, the ceramic pads, GCS, fuel and reflectors including the PSRs are installed. The top plenum elements are then installed and connected to the MCS by upper plenum restraints. A special grapple fixture may be designed to install graphite elements in one complete or part layer. Details of this modularization feature will have to be determined.

- It is extremely important that clean conditions exist while installing the graphite components inside the MCS. Care should also be taken to maintain the specified gaps between the adjacent graphite blocks during installation. The Quality

Assurance (QA) should ensure that no graphite blocks are damaged.

- The top of the MCS is then sealed with its contents and lowered carefully into the already installed reactor vessel in the silo. The weight of the MCS and its contents will be approximately 1000 metric tons (1100 tons). After lowering the MCS, all contact points and supports will be shimmed as required. An installation fixture for lowering the MCS may be required.

- After the MCS with its contents is properly installed and secured to the reactor vessel, a field fit up piece of the hot duct is installed and matched with the remaining Hot Duct Assembly. At the same time, the upper plenum shroud is installed.

Based on the above sequence of shop fabrication, preassembly and installation, it is anticipated that about 5% direct cost savings of the reactor internals installation can be achieved. The major cost saving here is the elimination of the machining of the internal surfaces of the core barrel after its installation in the silo. Also, since the above preassembly activities will be on parallel paths with the silo construction and reactor vessel installation, a significant savings of about 10 to 12 weeks from the construction schedule may be possible. This savings may be further improved while planning for the four reactor module construction schedule.

A major requirement in the above installation sequence is to maintain clean conditions through out the installation of the graphite elements until the entire core assembly is installed in the reactor cavity. Also, it is a challenge to assure that the graphite components will not be damaged during the lowering of the core assembly into the silo.

3.2. Nuclear Island Modularization

A Nuclear Island four module reactor plant key plan is shown in Figure 4 and an isometric view of the reactor building is shown in Figure 5. The approach to modularization will be developed based on modules consisting of equipment and commodities from one system or subsystem only, thus segregating systems from each other.

By following this approach and intentionally subdividing fluid, mechanical, and electrical systems so that each reactor module is served by dedicated equipment, it will be possible to identify a significant number of systems which can be designated for shop prefabrication and transported to the site as finished and tested modules. Modular construction will be chosen for the Shutdown Cooling Water System, spent fuel cooling system, HVAC system, Main and Shutdown Circulator Power Conditioning Equipment, Helium Purification System, and Helium Storage and Transport System.

In addition, a number of building areas will be identified as suitable for construction using prefabricated structural assemblies. As with mechanical and electrical systems, areas which are complex and require large amount of field labor will be selected for modularization. Areas which require steel liners which can also be used as metallic formwork, will also be selected for modularization. This strategy results in the use of preassemblies for the Reactor Cavity Cooling System (RCCS) panels, Reactor Head Area Shield Plugs, Interim Spent Fuel Storage locations, and lined cells in the Reactor Service Building used for fuel handling and control rod maintenance. Figure 6 shows the Head Area plugs, which are typical of this type of preassembly. Because the finished dimensions of the plugs, the RCCS panels, and the Reactor Service Building cells are larger than the shipping envelope, it is anticipated that they would be shipped in sections and final assembly would occur in the field.

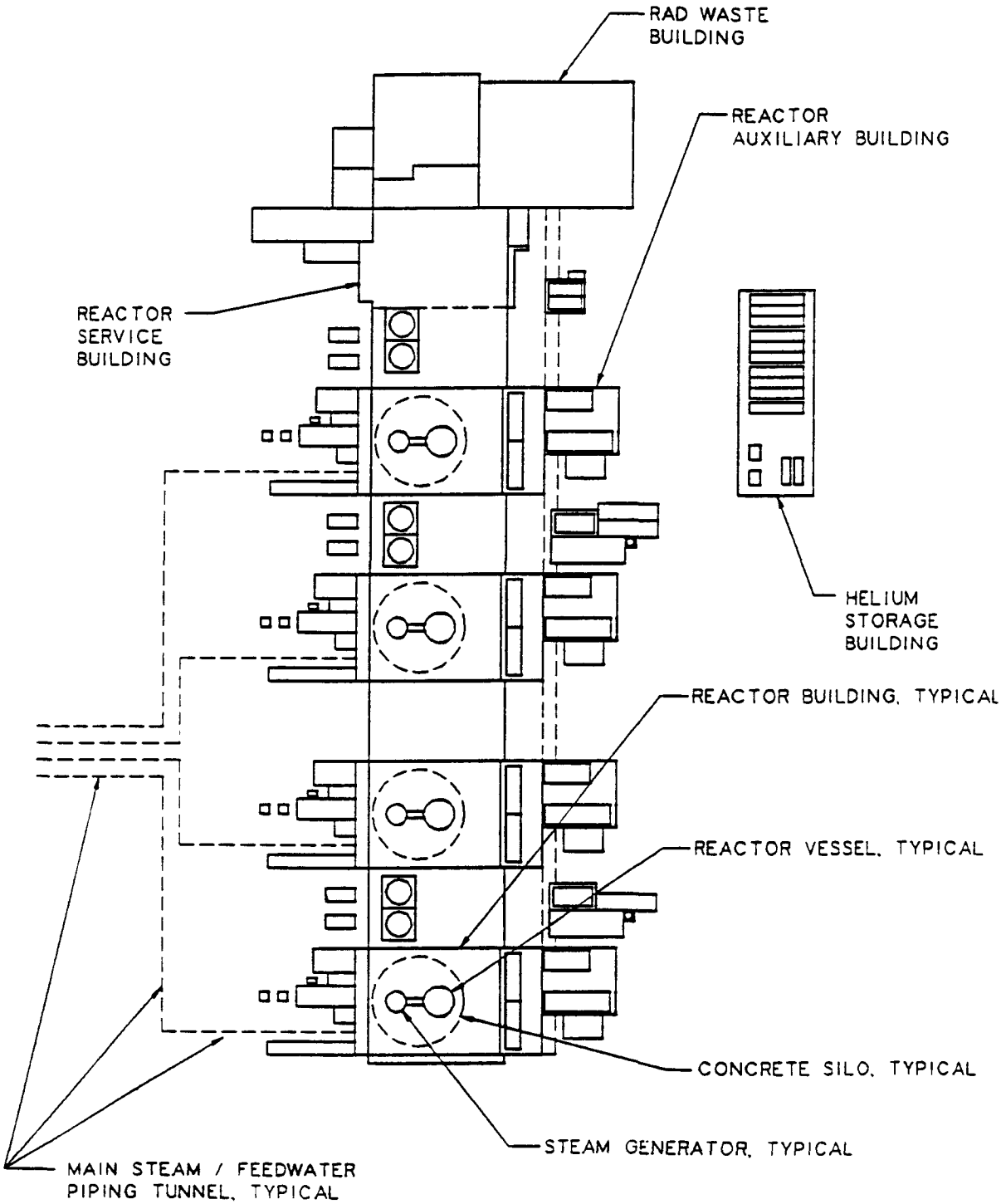

FIG. 4. Nuclear Island key plan

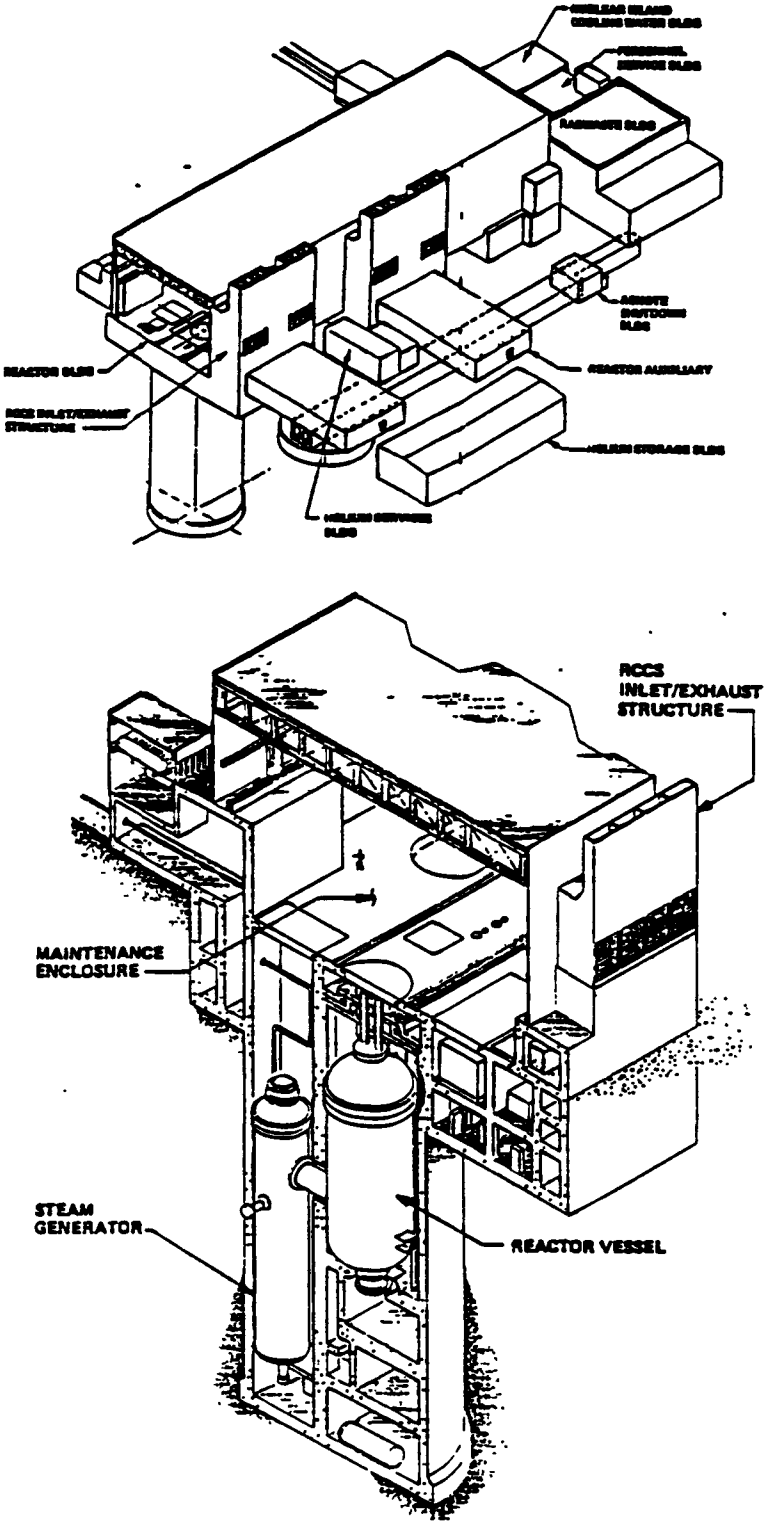

FIG. 5. Isometric view through Reactor Building

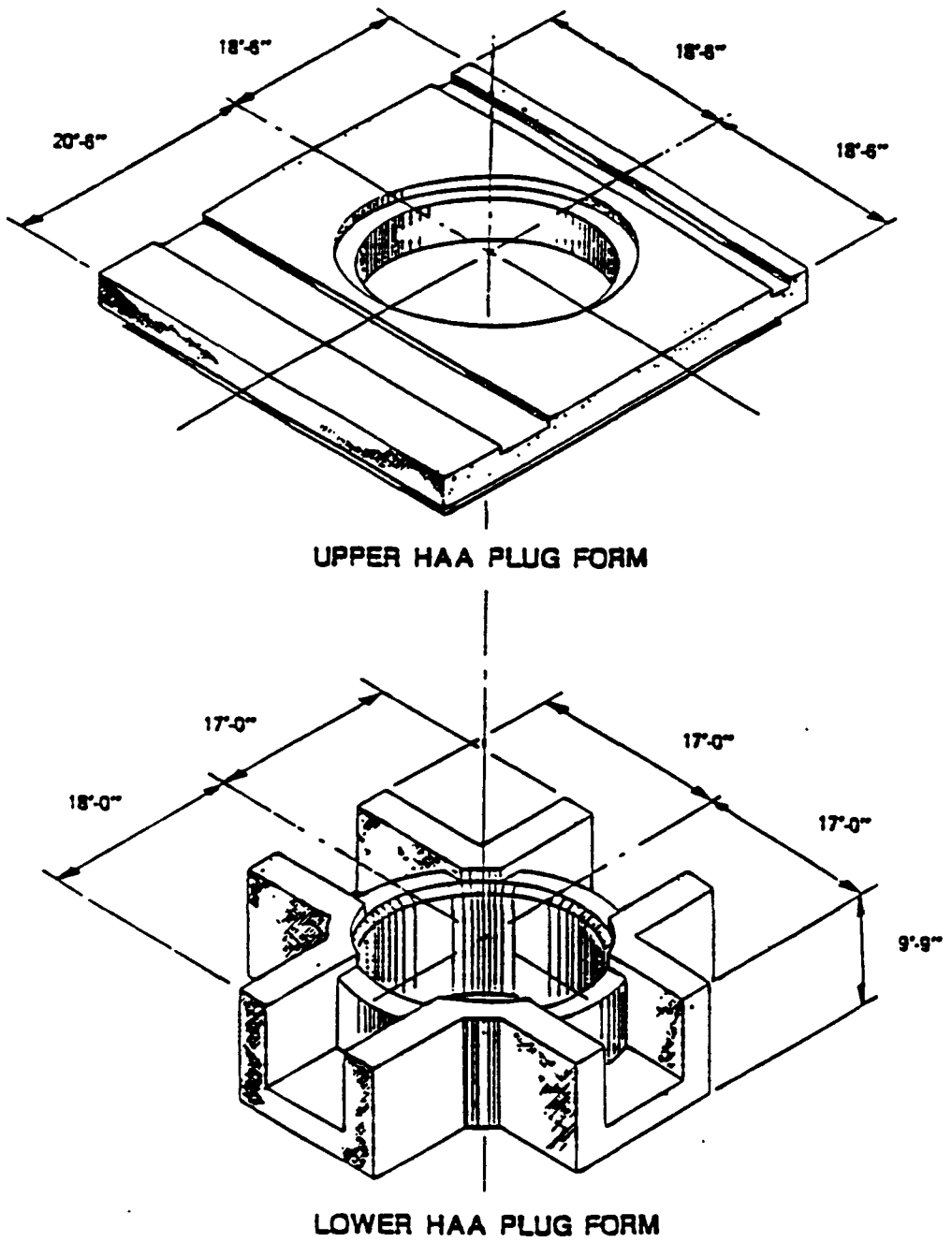

FIG 6. Reactor head access area plug

Within the Reactor Complex building and structures, there is opportunity for further use of prefabrication. Stair towers and elevator columns can be combined with HVAC and electrical routes and significant communication zones can be preconstructed. The optimum use of preassembly of reinforcing with structural elements (penetrations, embedments, liners, anchors etc.) have not been fully developed to the same level as criteria for mechanical modules. This aspect of structural module preconstruction will be examined further.

The plant construction schedule and the cost estimate will be developed in accordance with the above modularization design features. Table 2 gives a relative values for estimating module parameters for field and shop labor which will be used in the plant cost estimate preparation. It is anticipated that there will be a substantial savings in the plant construction schedule due to more shop fabrication and preassemblies rather than field fit up and site construction. However, at this time, this information is not available until detailed plant schedule is worked out. Also, a 5% direct cost savings may be realized because of modularization.

Table 2. Modular Estimating Parameters

	RELATIVE VALUE	
	FIELD	SHOP
LABOR COST ($/MH)	1.00	0.80
LABOR PRODUCTIVITY (MH/UNIT)	1.00	0.85
ORGANIZATIONAL OVERHEAD RATE ($/LAB MH)	1.00	1.50
INCREMENTAL MATERIALS (MODULE STRUCTURE)	0.00	0.05
INCREMENTAL FIELD LABOR (MODULE HOOKUP)	0.00	0.15
INCREMENTAL TRANSPORTATION	0.00	0.03
NET COST DIFFERENTIAL	1.00	0.95
INTRA-SITE LEARNING FACTOR (REDUCTION PER DOUBLING)	0.97	0.94

3.3. Energy Conversion Area

The ECA consists of the various buildings and facilities outside the Nuclear Island such as Turbine building complex, Water treatment facility, cooling tower, warehouses, etc. as shown in Figure 2, MHTGR plot plan. The ECA modularization could cover a significant portion of the ECA facilities.

The ECA modularization can be categorized into backbone modules and zone modules. The backbone modules are pipe racks carrying main steam and feed water pipes, common service area piping such as compressed air, auxiliary steam, treated water etc. The centralized pipe rack and raceway corridor arrangement which is extensively used in the modularized plant systems will be used to derive most benefits and reduce risk and cost. The modules will be standard rail/road transportable modules and will be placed directly on the prepared foundations at site, to minimize storage and handling. Multiple backbone modules will be required and will be extended 13 cm (5 in.) on each end of the modules and mated (field welded or flanged) with the respective fit-up piece on to the next module. Because of height limitations during transportations, the modules may be stacked to a maximum of four not exceeding 14m (46 ft) in total height. The piping is generally supported by structural steel framework with columns and beams designed to withstand pipe restraint, module handling and installation loads etc. The fabrication tolerances will be restricted to ±2mm (1/16 in.) at interface points. Besides piping rack modules, the power distribution center (PDC) modules are another example of the backbone module. The main PDC module supplies power and control interface for all ECA equipment in the plant. Several substation PDC modules are interconnected as required which may include switchgear, motor control centers, uninterrupted power supplies, batteries, instrument racks, HVAC, lighting and interconnecting wiring and bus ducts as required. The PDC module fabricator will be made responsible for complete coordination of engineering, design, drawings, production, procurement, and testing of all specified items through

shipment. Air compressor and water treatment modules also fall in the category of backbone module. Equipment zone modules such as boiler feed pumps in the auxiliary boiler building will be developed along with drive motors, valves, controls and lubrication unit. The fire water and the filtered water storage tanks will be modularized. All the building facilities will be made of tilt-up reinforced (or prestressed) precast panels to the maximum extent possible. All reinforcing bar cages and concrete forms wherever possible will also be modularized.

All of the above features of modularization will significantly help in achieving an accelerated schedule and lowering the installed cost by allowing parallel construction, minimizing site congestion, reducing field labor and supervision, and reducing site overhead costs. The extent of modularization will be determined as the design progresses. It is anticipated that at least 30% of the ECA facilities will be modularized. A 10% to 15% direct cost savings may be possible of those items subject to modularization. There would be additional savings in schedule modifications which will be determined later.

4. CONCLUSION

Modularization offers one of the best strategies to reduce plant schedule and cost rand also to minimize associated risks. Modularization studies performed on the MHTGR have shown promising potential for significant cost savings and schedule reduction. A direct cost saving of at least 5% is possible, in each of the three areas explained above. In addition, tangible benefits will be identified in the constructability and estimated cost of the plant. Intangible benefits associated with maximizing shop fabrication, reducing field labor and creation of parallel construction schedules will also be considered.

5. ACKNOWLEDGMENTS

The authors would like to thank the U. S. Department of Energy, Gas cooled Reactor Associates, General Atomics, Bechtel National Inc., and Stone & Webster Corporation for permission to publish this paper.

6. REFERENCES

[1]. Bechtel National Inc, et. al., "Conceptual Design Summary Report - Modular HTGR Plant," Report No. DOE- HTGR-87-092,(September 1987).

[2]. Gas-Cooled Reactor Associates., "A Review of the Approach to MHTGR Modularization," (December 1990).

[3]. United Engineers & Constructors Report., "Effects of Implementing Modular Construction on a Cogeneration Station," Letter Report No. GCRA/SWEC-0279, (August 1990).