ANNEX II

SAFETY DESIGN FEATURES OF THE IRIS

International Team Led by Westinghouse,
United States of America

II-1. Description of the IRIS design

The International Reactor Innovative and Secure (IRIS) is an advanced, integral, light-water cooled reactor of medium generating capacity (335 MW(e)), that features an integral reactor vessel that contains all the reactor primary system components, including the steam generators, coolant pumps, pressurizer and heaters, and control rod drive mechanisms; in addition to the typical core, internals, control rods and neutron reflector [II-1, II-2]. This integral configuration allows the use of a small, high design pressure, spherical steel containment which results in a significant reduction in the size of the nuclear island. Other IRIS innovations include a simplified passive safety system concept and equipment features that derive from the "safety-by-design"™ philosophy [II-3]. This design approach allows eliminating certain accident initiators at the design stage, or when outright elimination is not possible, decreases accident consequences and/or their probability of occurrence. Major design characteristics of IRIS are given in Table II-1. As part of the IRIS pre-application licensing review by the U.S. NRC, the IRIS design team has developed a test plan that will provide the necessary data for safety analysis computer model verification as well as for verifying the manufacturing feasibility, operability, and durability of new component designs.

IRIS is innovative in design – employing an integrated primary system that incorporates all the main primary circuit components within a single vessel, i.e., the core with control rods and their drive mechanisms, eight helical coil steam generators with eight associated fully immersed axial flow pumps, and a pressurizer, see Fig. II-1.

The integral configuration offers intrinsic design improvements as briefly discussed below:

- *Steam generators:* With the primary coolant outside, tubes are in compression, and tensile stress corrosion cracking is eliminated;
- *Primary coolant pumps:* The axial fully immersed pumps result in no seal leak concerns, no possibility for shaft breaks, and no required maintenance;
- *Internal control rod drive mechanisms (CRDMs):* This solution eliminates head penetrations and possibility of penetration failures as well as need of any future head replacements, and eliminates rod ejection accidents;
- *Pressurizer:* Much larger volume/power ratio gives better control of pressure transients. Additionally, no sprays are required;
- *Large downcomer:* The 1.7 m wide downcomer reduces the fast neutron flux on the reactor vessel by 5 orders of magnitude. This leads to a "cold" (i.e., not activated) vessel with almost no outside dose, no vessel embrittlement, and no need for surveillance. The vessel is essentially "eternal", and decommissioning is simplified;
- *Fuel assembly:* The same assembly as in standard Westinghouse PWRs is used, but it can provide an extended cycle up to 48 months;
- *Maintenance:* Intervals between maintenance outages can also be extended to 48 months, thus enabling uninterrupted operation for up to 4 years.

While leading to a larger reactor vessel, the integral layout results in a smaller containment (as illustrated in Fig. II-2) and overall a more compact site, with positive impact on safety and economics.

TABLE II-1. MAJOR DESIGN FEATURES OF IRIS

PARAMETERS	FEATURES
Core thermal power	1000 MW
Mode of operation	Base load operation standard. Enhanced load follow mode with control rods (“mechanical shim” or M-SHIM strategy)
Plant design life	Over 60 years
Fuel	Sintered ceramic UO_2/MOX fuel
Enrichment	Up to 4.95 % U fuel readily available, enabling extended cycle up to 4 years. Option for infrequent refuelling (8-10 years) requires 7~10% fissile content.
Coolant and moderator	Light water, sub-cooled.
Number of coolant pumps	Integral primary system; forced circulation with 8 in-vessel fully immersed pumps
Containment	Pressure suppression, spherical steel
Reactivity feedback	Moderator temperature coefficient (MTC) negative over the whole cycle and power operating range.
Power flattening approach	Burnable absorbers
Reactivity control	Soluble boron, burnable absorber, control rods.
Shut down system	Control rods, emergency boron system.
Fuel cycle options	Near-term deployment – fuel licensable today; Mid-term deployment with extended refuelling interval – requires fuel irradiation testing.
Average discharge burn-up	Up to 60 GW·day/t U (immediately available); Increased discharge burn up option (expected available by ~2020)

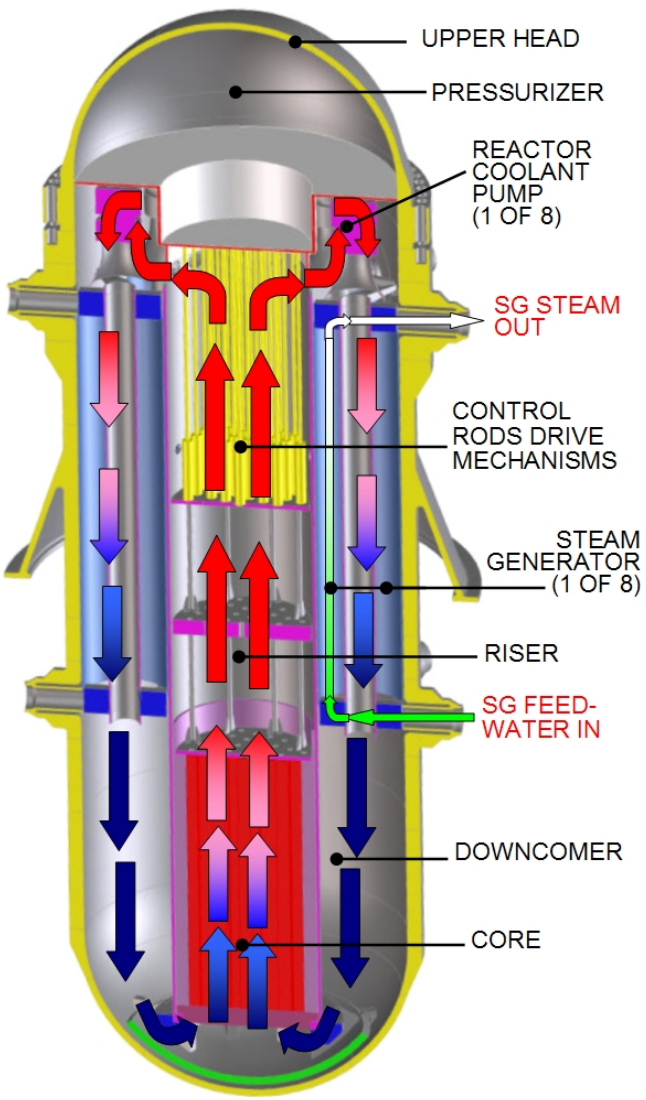

FIG. II-1: Integral primary system of IRIS.

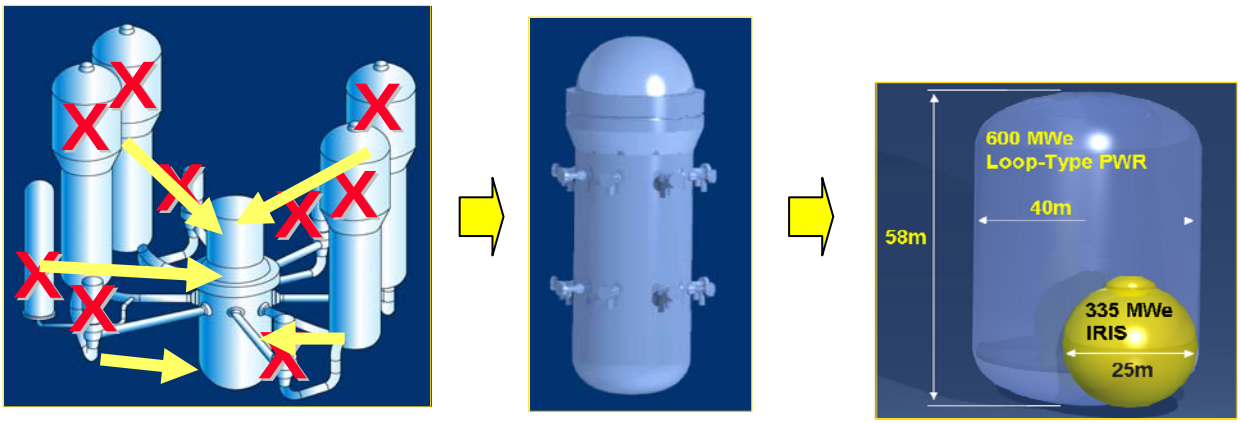

FIG. II-2. Compact integral layout of IRIS.

IRIS new design features and components

The integral reactor coolant system (Integral RCS) is characterized by:

- Entire RCS located in a single pressure vessel;
- No additional pressure vessels, connecting loop piping, or supports;

The integral reactor vessel includes:

- Axial-flow, fully immersed coolant pumps with high-temperature bearings and high-temperature sealed rotor and stator windings;
- Helical-coil, once through steam generators (SGs);
- Internal control rod drive mechanisms (I-CRDMs) designed for in-vessel environment;
- Pressurizer and related heaters.

IRIS three-tier safety concept

The overall approach to safety in IRIS is represented by the following three-tier approach:

1. The first tier is the safety-by-design™ [II-3], which aims at eliminating by design the possibility for an accident to occur, rather than dealing with its consequences. By eliminating some accidents, the corresponding safety systems (passive or active) become unnecessary as well;
2. The second tier is provided by simplified passive safety systems, which protect against the still remaining accidents and mitigate their consequences;
3. The third tier is provided by active systems, which are not required to perform safety functions (i.e., are not safety grade) and are not considered in deterministic safety analyses, but do contribute to reducing the core damage frequency (CDF).

First Tier

The first tier is embodied in the IRIS "safety-by-design"™ philosophy [II-3]. Nuclear power plants consider a range of hypothetical accident scenarios. The IRIS "safety-by-design"™ philosophy is a systematic approach that aims — by design — at eliminating altogether the possibility for an accident to occur, i.e., to eliminate accident initiators, rather than having to design and implement systems to deal with the consequences of the accident. It should be noted that the integral configuration is inherently more amenable to this approach than a loop-type configuration, thus enabling safety improvements not possible in a loop reactor. To consider only the most obvious example, loss of coolant accidents caused by a large break of external primary piping (large break loss of coolant accidents – large-break LOCAs) are eliminated by design since no large external piping exists in IRIS. Additionally, in cases where it is not possible or practical to completely eliminate potential initiators of an accident, safety-by-design™ aims at reducing the severity of the accident's consequences and the probability of its occurrence. As a result of this systematic approach, the eight Class IV design basis events [II-3] (potentially leading to most severe accidents) that are usually considered in light water reactors (LWRs), are reduced to only one in IRIS, with the remaining seven either completely eliminated by design, or their consequences (as well as probability) reduced to a degree that they are no longer considered Class IV events [II-1, II-2].

Second Tier

The second tier consists of the passive safety systems needed to cope with the still-remaining potential accidents. Because of the safety by design™, they are fewer and simpler than in typical passive loop-type LWRs [II-1]. Notably, the elimination of the possibility for some accidents to occur enables simplifications of the IRIS design and passive safety systems, resulting simultaneously in enhanced safety, reliability, as well as economics. In other words, the increased safety and improved economics support each other in the IRIS design.

Third Tier

The third tier has been addressed within the probabilistic risk assessment/probabilistic safety assessment (PRA/PSA) framework. In fact, PRA was initiated early in the IRIS design, and was used iteratively to guide and improve the design safety and reliability (thus adding "reliability by design"). The PRA has suggested modifications to the reactor system designs, resulting in reduction of the predicted core damage frequency (CDF). After these modifications, the preliminary PRA level 1 analysis [II-4] estimated the CDF due to internal events (including anticipated transients without scram, ATWS) to be about 2×10^{-8}, more than one order of magnitude lower than in typical advanced LWRs [II-1]. A subsequent evaluation [II-5] of the large early release frequency (LERF) also produced a very low value, of the order of 6×10^{-10}, which is more than one order of magnitude lower than in typical advanced loop LWRs [II-1], and several orders of magnitude lower than in present LWRs.

II-2. Passive safety design features of IRIS

Inherent safety features

The IRIS design significantly increases defence in depth by adding as the first layer of safety an inherent elimination of as many accidents as practical through the safety-by-design™ philosophy [II-3], as previously described. The postulated accident scenarios eliminated include:

- Large break LOCAs;
- Control rod ejection;
- Reactor coolant pump shaft break.

The postulated accidents whose severity or consequences are reduced include:

- Small/medium break LOCAs;
- Steam generator tube rupture;
- Steam line break;
- Feed line break;
- Reactor coolant pumps seizure.

Passive safety systems

The passive safety systems in IRIS are fewer and simpler than in typical passive LWRs [II-1]. Their function is to protect against still remaining accidents and mitigate their consequences.

When compared with typical passive LWRs, the IRIS safety systems are not novel. Most of them are similar to those in the AP600/AP1000 but simplified and fewer in number, while the pressure suppression system is similar to that of a BWR [II-1].

Active systems

In IRIS, no active safety-grade systems are required. However, active non-safety-grade systems, while not assumed available in deterministic safety analysis, may be used (if available) to help mitigate accidents, and thus enhance the defence in depth (DID) and contribute to reducing the probability of core damage in the PRA analysis. The active, non-safety related features include:

1. Stand-by diesel generators which provide power to DID systems in the event that the normal plant alternate current (AC) power supplies are not available[1];
2. A start-up feedwater system that can provide feedwater to the steam generators in order to remove core decay heat, in the event that the normal feedwater system is unavailable;
3. Functioning of the normal plant cooling water systems (service water and component cooling water) can provide support for other DID components as well as remove core decay heat;
4. The chemical and volume control system normal make-up pumps with their boric acid tank as suction source can provide high pressure make-up water to the RCS in the event of a small loss of coolant accident;
5. The normal residual heat removal pumps with their in-containment water source can provide low pressure make-up water to the RCS and heat removal capability when the RCS pressure is reduced;
6. Diverse means of containment cooling are provided to significantly reduce the chance of containment failure.

Design and functions of the passive safety systems

IRIS employs simplified passive safety systems to mitigate the effects of all postulated design basis events. Shown schematically in Fig. II-3, these systems include the following innovative features:

- *Pressure suppression system (PSS)*, located within the containment vessel, acts to condense steam released into the small spherical steel containment due to any postulated design basis LOCA or steam/feed line break. The IRIS PSS is designed to limit the containment pressure to ~1.0 MPa, or only 65% of the containment vessel design pressure. The PSS also provides an elevated source of water that is available for gravity injection into the reactor vessel through the direct vessel injection (DVI) lines in the event of a LOCA;
- *Emergency heat removal system* consists of four independent sub-systems, each of which has a horizontal, U-tube heat exchanger connected to one of the four IRIS SG steam lines. These heat exchangers are immersed in the refuelling water storage tank (RWST) located outside the containment structure and act as the heat sink for the emergency heat removal system (EHRS) heat exchangers. The EHRS operates on natural circulation, removing heat from the primary system via the steam generators heat transfer surface, transferring the heat to the RWST water and condensing the steam, and returning the condensate back to the SG via the feedwater line. Following a LOCA, the EHRS heat removal function acts to depressurize the RCS by cooling the SGs thus condensing the steam produced by the core directly inside the reactor vessel.

---

[1] Note that batteries are used as emergency backup for safety-grade equipment and functions.

The EHRS is designed that only one of the four independent sub-systems is needed to remove the decay heat, thus providing a very high degree of redundancy, important for both safety and security concerns;

- *Long-term gravity makeup system*, combined with a small RCS depressurization system and the containment layout, provides gravity-driven make-up water to the reactor vessel to assure that the core remains covered indefinitely following a LOCA;
- *Emergency boration system (EBT*): Two full emergency boration systems provide a diverse means of reactor shutdown by delivering borated water to the reactor vessel (RV) through the DVI lines. By their operation, these tanks also provide limited gravity feed make-up water to the primary system;
- *Automatic depressurization system (ADS):* A small ADS from the pressurizer steam space assists the EHRS in depressurizing the reactor vessel if the reactor vessel coolant inventory drops below a specified level. The ADS consists of two parallel lines, each with two normally closed valves. The ADS discharges into a quench tank through a sparger. This ADS function ensures that the reactor vessel and containment pressure are equalized in a timely manner, thus limiting the loss of coolant and preventing core uncovery following a postulated LOCA even at low reactor vessel elevation;
- A *specially constructed lower containment volume* that collects the liquid break flow, as well as any condensate from the containment, in a cavity where the reactor vessel is located. Following a LOCA, the cavity is flooded above the core level, creating a gravity head of water sufficient to provide coolant make-up to the reactor vessel through the DVI lines. This cavity also assures that the lower outside portion of the reactor vessel surface is or can be wetted following postulated core damage events.
- The *safety strategy of IRIS* provides a diverse means of core shutdown by make-up of borated water from the EBT in addition to the control rods; also, the EHRS provides a means of core cooling and heat removal to the environment in the event that normally available active systems are not available. In the event of a significant loss of primary-side water inventory, the primary line of defence for IRIS is represented by the large coolant inventory in the reactor vessel and the fact that EHRS operation limits the loss of mass, thus maintaining a sufficient inventory in the primary system and guaranteeing that the core will remain covered for all postulated events. The EBT is actually capable of providing some primary system injection at high pressure, but this is not necessary, since the IRIS strategy relies on “maintaining” coolant inventory, rather than “injecting” make-up water. This strategy is sufficient to ensure that the core remains covered with water for an extended period of time (days and possibly weeks). Thus, IRIS does not require and does not have the high capacity, safety grade, high-pressure safety injection system characteristic of typical loop reactors.

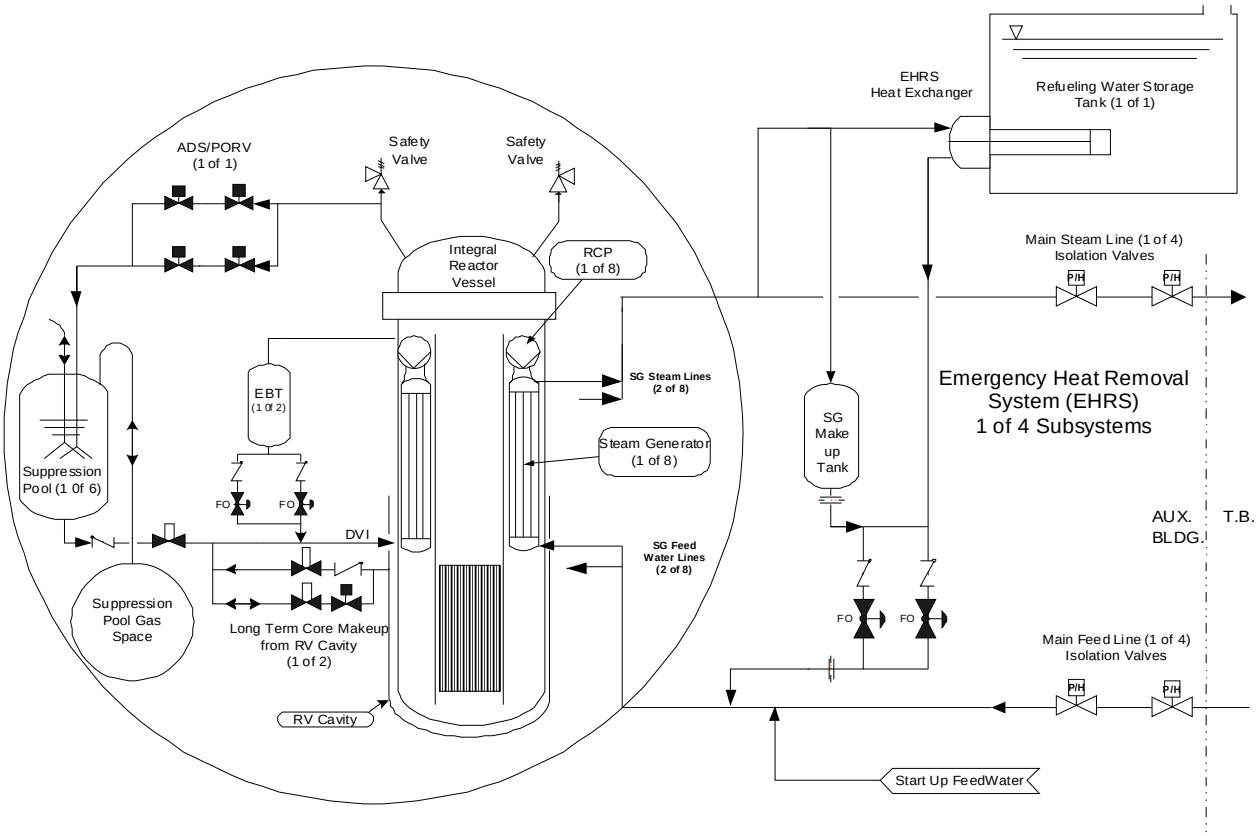

FIG. II-3. Schematic view of the IRIS passive safety systems.

Passive safety features supporting management of severe accidents

The IRIS containment is inerted with nitrogen gas during operation so that the control of hydrogen concentration following postulated events and severe accident scenarios cannot cause containment pressurization due to hydrogen burn.

IRIS is designed to provide in-vessel retention of core debris following severe accidents by assuring that the vessel is depressurized, and by cooling the outside vessel surface. The reactor vessel is cooled by containing the lower part of the vessel within a cavity that always will be flooded following any event that jeopardizes core cooling. Also, like in AP1000 [II-1], the vessel is covered with stand-off insulation that forms an annular flow path between the insulation and the vessel outer surface. Following an accident, water from the flooded cavity fills the annular space and submerges and cools the bottom head and lower sidewalls of the vessel. A natural circulation flow path is established, with heated water and steam flowing upwards along the vessel surface, and single-phase water returning downward along the outside of the vessel insulation, to the bottom of the flood-up cavity. The AP1000 testing has demonstrated that this natural circulation flow is sufficient to prevent corium melt-through. Application of the AP1000 conditions to IRIS is conservative, due to the IRIS much lower core power to vessel surface ratio. The design features of the containment ensure flooding of the vessel cavity region during accidents and submerging the reactor vessel lower head in water since the liquid effluent released through the break during a LOCA event is directed to the reactor cavity. The IRIS design also includes a provision for draining part of the water present in the PSS water tanks directly into the reactor cavity.

A diverse, passive containment cooling system is employed as part of the severe accidents management strategy, to significantly reduce the chance of containment failure.

II-3. Role of passive safety design features in the defence-in-depth

Some major highlights of the passive safety design features in the IRIS design, structured in accordance with the various levels of defence in depth [II-6, II-7], are brought out below.

Level 1: Prevention of abnormal operation and failure

The IRIS safety-by-design™ systematic approach is the basis for the effective Level 1 prevention of many initiating events; correspondence between the design features and the initiating events prevented is the following:

(A) Integral design of primary circuit with no large diameter piping:

- Elimination of large break LOCAs;
- Elimination of loss of seal (head, pump) LOCAs;
- Elimination of control rod ejection accidents;
- Elimination of concerns related to high pressure safety injection (HPSI) systems;

(B) Increased natural circulation due to large, tall vessel:

- Reduced severity of loss of flow (LOFA) accidents;

(C) Large thermal inertia due to increased water inventory:

- Prevention of core uncovery in small and medium break LOCAs;
- Reduced requirements for heat removal systems;
- Reduced concerns related to loss of feedwater;

(D) Other specific design solutions:

- Elimination of the possibility of a reactor coolant pump shaft break.

Level 2: Control of abnormal operation and detection of failure

IRIS will use state of the art plant control and protection systems to monitor and control plant operations; it would also incorporate advanced diagnostics/prognostics systems. The contribution of passive systems at this level would be as follows:

- Slower progression of a loss of heat sink accident (LOHS) due to large thermal inertia.

Level 3: Control of accidents within the design basis

Level 3 safety functions are contributed to by the following passive safety features/systems:

(A) Passive emergency heat removal system (EHRS):

- Control of LOHS;

(B) Increased natural circulation due to large, tall vessel:

- Control of loss of flow accidents (LOFA);

(C) Steam generator system designed for full primary pressure:

- Significantly reduced severity and simple mitigation of steam generator tube rupture (SGTR) accident.

Level 4: Control of severe plant conditions, including prevention of accident progression and mitigation of consequences of severe accidents

The following passive safety features/systems of IRIS contribute to achieving the objective at this DID level:

- Prevention of LOFA progression into a more severe accident sequence, achieved via increased natural circulation due to large, tall vessel;
- Passive flooding of the reactor cavity following a LOCA;
- Secondary means of core cooling via containment cooling;
- Passive in-vessel retention of core debris following severe accidents;
- Inerted containment;
- Passive EHRS;
- Very low leakage containment; elimination/reduction of the containment vessel penetrations.

Level 5: Mitigation of radiological consequences of significant release of radioactive materials

Level 5 safety functions are contributed to by the following passive safety features/systems:

(A) Small fuel inventory:

- Reduced radioactivity release;

(B) High design pressure containment plus pressure suppression system plus reduced core power density plus increased thermal inertia:

- Slower progression of accidents and increased retention of fission products;
- Low leakage rate containment;
- Deposition of radionuclides in auxiliary building.

II-4. Acceptance criteria for design basis and beyond design basis accidents

II-4.1. List of design basis and beyond design basis accidents

Table II-2 summarizes the main inherent safety features of IRIS, stemming from its safety-by-design™ approach [II-3], together with their implication on design basis events (listed in the fourth column) typically considered by the US NRC for PWRs.

Preliminary list of the initiating events for beyond design basis accidents is the following:

- Hypothetical reactor pressure vessel break;
- A transient with failure of all safety systems.

II-4.2. Acceptance criteria

The deterministic acceptance criteria for design basis accidents (DBAs) are assumed to be the same as for conventional PWRs with a note, that de facto most of the DBAs in IRIS would be either eliminated or downgraded via a safety-by-design™ approach [II-3], see Table II-2.

The deterministic acceptance criteria for beyond design basis accidents (BDBA) in IRIS, defined on a preliminary basis, include in-vessel retention by passive means.

TABLE II-2. SAFETY-BY-DESIGN™ IRIS PHILOSOPHY AND ITS IMPLICATIONS ON DESIGN BASIS EVENTS

IRIS DESIGN CHARACTERISTIC	SAFETY IMPLICATION	ACCIDENTS AFFECTED	DESIGN BASIS EVENTS	EFFECT ON DESIGN BASIS EVENTS BY IRIS SAFETY-BY-DESIGN™
Integral layout	No large primary piping	• Large break loss of coolant accidents (LOCAs)	Large break LOCA	Eliminated
Large, tall vessel	Increased water inventory Increased natural circulation Accommodates internal control rod drive mechanisms (CRDMs)	• Other LOCAs • Decrease in heat removal various events • Control rod ejection, head penetrations failure	Spectrum of control rod ejection accidents	Eliminated
Heat removal from inside the vessel	Depressurizes primary system by condensation and not by loss of mass Effective heat removal by steam generators (SG)/emergency high removal system (EHRS)	• LOCAs • LOCAs • All events for which effective cooldown is required • Anticipated transients without scram (ATWS)		
Reduced size, higher design pressure containment	Reduced driving force through primary opening	• LOCAs		
Multiple, integral, shaft-less coolant pumps	Decreased importance of single pump failure No shaft	• Locked rotor, shaft seizure/ break • Loss of flow accidents (LOFAs)	Reactor coolant pump shaft break Reactor coolant pump seizure	Eliminated Downgraded
High design pressure steam generator system	No SG safety valves Primary system cannot over-pressure secondary system Feed/Steam System Piping designed for full reactor coolant system (RCS) pressure reduces piping failure probability	• Steam generator tube rupture • Steam line break • Feed line break	Steam generator tube rupture	Downgraded
			Steam system piping failure Feedwater system pipe break	Downgraded Downgraded
Once through steam generators	Limited water inventory	• Feed line break • Steam line break		
Integral pressurizer	Large pressurizer volume/reactor power	• Overheating events, including feed line break • ATWS		
			Fuel handling accidents	Unaffected

The probabilistic acceptance criteria for BDBA in IRIS are summarized in Table II-3.

TABLE II-3 PROBABILISTIC ACCEPTANCE CRITERIA FOR BDBA IN IRIS

Core damage frequency (CDF)	$<10^{-7}$
Large early release frequency (LERF)	$\sim10^{-9}$

II-5. Provisions for safety under external events

The safety design features of IRIS intended to cope with external events and external/internal event combinations are described in detail in [II-8].

The reactor, containment, passive safety systems, fuel storage, power source, control room and back-up control are all located within the reinforced concrete auxiliary building and are protected from on-site explosions. The reactor unit appears as a very low profile, minimum sized target to an aircraft. The IRIS containment is completely within the reinforced concrete auxiliary building and one-half of it (13 m) is actually underground, since the containment is only 25m in diameter. The external, surrounding building target profile is only about 30 m high, and can easily be hardened and/ or placed farther underground. Also, the IRIS safety features are passive and are contained within the auxiliary building.

IRIS is designed to survive a hypothetical flood called the probable maximal flood (PMF), which combines the worst possible values of all factors that contribute to producing a flood. This and other capabilities of the IRIS design is due to the use of the passive features, which are all contained within the auxiliary building and do not require external water or power supplies for at least 7 days.

As an example, the plant ultimate heat sink is provided by water stored in the auxiliary building in the refuelling water storage tank (RWST). This water is heated and boiled and steam is vented to the atmosphere. This safety grade ultimate heat sink provides for the removal of sensible heat of the reactor coolant system and core decay heat for at least one week, without credit for any water make-up. The design objective of IRIS is to apply both the safety-by-design™ philosophy [II-3] and the PRA guided design approach to design the plant in such a way as to minimize the contribution of external events to core damage frequency (CDF) to a level lower or at most comparable to that of the internal events, which is currently estimated to be $\sim2\times10^{-8}$.

II-6. Probability of unacceptable radioactivity release beyond plant boundary

See Table II-3.

II-7. Measures planned in response to severe accidents

Passive safety design features of IRIS aimed at the prevention of core damage (decrease of core damage probability) are described in section II-2, those aimed at mitigation of severe accident consequences are listed in section II-3 (DID Level 5).

Regarding measures for population evacuation/relocation in the vicinity of a plant, the designers consider an option to license IRIS with the off-site emergency planning zone being drastically reduced in area or even essentially eliminated by reducing it to the site boundary.

II-8. Summary of passive safety design features for IRIS

Tables II-4 to II-8 below provide the designer’s response to the questionnaires developed at an IAEA technical meeting “Review of passive safety design options for SMRs” held in

Vienna on 13 – 17 June 2005. These questionnaires were developed to summarize passive safety design options for different SMRs according to a common format, based on the provisions of the IAEA Safety Standards [II-6] and other IAEA publications [II-7, II-9]. The information presented in Tables II-4 to II-8 provided a basis for the conclusions and recommendations of the main part of this report.

TABLE II-4. QUESTIONNAIRE 1 – LIST OF SAFETY DESIGN FEATURES CONSIDERED FOR/INCORPORATED INTO THE IRIS DESIGN

#	SAFETY DESIGN FEATURES	WHAT IS TARGETED?
1	Integral primary circuit	Elimination of large-break LOCA
2	Integral primary circuit	Increased coolant inventory / thermal inertia
3	Internal CRDMs	Elimination of rod ejection
4	Internal CRDMs	Elimination of vessel head penetrations
5	Increased natural circulation	Downgraded LOFA
6	Reduced size, high design pressure containment	Small-break LOCA mitigation
7	Pressure suppression containment	Fission product retention improvement
8	Inerted containment	Prevention of hydrogen explosion
9	Reduced core power density	Slower progression of accidents
10	Integral steam generators, designed for full system pressure and with tubes in compression	Prevention or downgrading of: - SG tube rupture; - Steam line break; - Feed line break. Elimination of tensile-stress induced cracking
11	Internal (fully immersed) axial-design pumps	Elimination of: - Shaft seizure; - Locked rotor
12	Thick downcomer acting as internal neutron shield	No vessel embrittlement, and no need for surveillance, resulting from a reduction of fast neutron fluence on the reactor vessel
13	Large-volume integral pressurizer	Prevention of overheating events, elimination of sprays

TABLE II-5. QUESTIONNAIRE 2 – LIST OF INTERNAL HAZARDS

#	SPECIFIC HAZARDS THAT ARE OF CONCERN FOR A REACTOR LINE	EXPLAIN HOW THESE HAZARDS ARE ADDRESSED IN A SMR
1	Prevent unacceptable reactivity transients	Internal CRDMs (no rod ejection); limited negative moderator reactivity coefficient;
2	Avoid loss of coolant	- Integral design of the primary circuit (no large-break LOCA); - Increased coolant inventory extends grace period; - Coupled response of reactor vessel and containment to small-break LOCA limits loss of coolant and prevents core uncovery .
3	Avoid loss of heat removal	- Large thermal inertia due to increased water inventory; - Passive EHRS; - Passive containment cooling; - Passive in-vessel retention;
4	Avoid loss of flow	- Increased natural circulation due to a large, tall vessel

#	SPECIFIC HAZARDS THAT ARE OF CONCERN FOR A REACTOR LINE	EXPLAIN HOW THESE HAZARDS ARE ADDRESSED IN A SMR
5	Avoid exothermic chemical reactions	- It is ensured that thermal state of the fuel rods in accident conditions excludes the exothermic reaction of zirconium oxidation by steam; - Hydrogen production due to zirconium-water interaction is coped with by inerted containment

TABLE II-6. QUESTIONNAIRE 3 – LIST OF INITIATING EVENTS FOR ABNORMAL OPERATION OCCURRENCES (AOO) / DESIGN BASIS ACCIDENTS (DBA) / BEYOND DESIGN BASIS ACCIDENTS (BDBA)

#	LIST OF INITIATING EVENTS FOR AOO / DBA / BDBA TYPICAL FOR A REACTOR LINE (PWRS)	DESIGN FEATURES OF IRIS USED TO PREVENT PROGRESSION OF THE INITIATING EVENTS TO AOO / DBA / BDBA, TO CONTROL DBA, TO MITIGATE BDBA CONSEQUENCES, ETC.	INITIATING EVENTS SPECIFIC TO THIS PARTICULAR SMR
1	Large-break LOCA	- Integral primary circuit eliminates large-break LOCA	Nothing in particular specified here
2	Small-break LOCA	Coupled response of reactor vessel and containment to small-break LOCA limits loss of coolant and prevents core uncovery.	
3	LOCA	- Integral primary system - High design pressure containment; - Increased coolant inventory extends grace period; - Pressure suppression system.	
4	Steam generator tube rupture	- Because the primary coolant is on the shell side of the steam generators, the tubes are in compression and the possibility of a steam generator tube rupture (e.g., by stress-corrosion cracking) is greatly reduced; - SG designed for full primary system pressure, up to main isolation valves (MIV)	
5	Rod ejection	Internal CRDMs	
6	LOFA	Multiple (8) main circulating pumps (MCPs); Increased natural circulation fraction because of a large, tall vessel.	

TABLE II-7. QUESTIONNAIRE 4 - SAFETY DESIGN FEATURES ATTRIBUTED TO DEFENCE IN DEPTH LEVELS

#	SAFETY DESIGN FEATURES	CATEGORY: A-D (FOR PASSIVE SYSTEMS ONLY), ACCORDING TO IAEA-TECDOC-626 [II-9]	RELEVANT DID LEVEL, ACCORDING TO NS-R-1 [II-6] AND INSAG-10 [II-7]
1	Safety-by-design™ approach	- Several DBAs eliminated by design; - Reduced severity/progression of several other DBAs	1 3,4,5
2	Integral primary circuit	Elimination of large-break LOCA – A	1
3	Internal CRDMs	Prevention of rod ejection – A	1
4	Passive EHRS	Downgrading loss of heat sink – D	3
5	Steam generator system designed for full system pressure up to MIV	A	3
6	Increased natural circulation fraction	Downgrading LOFA – B	1, 3, 4
7	Large thermal inertia	B, C, D (depending on the accident)	1, 2
8	Inerted containment	A	4
9	Containment cavity and design ensuring in-vessel retention	A, B	4
10	Low-leakage containment	Limiting radioactivity release – A	5
11	Small fuel inventory (relative to large NPPs)	Limiting radioactivity release – A	5
12	Slower progression of accidents and increased retention of fission products, due to high design pressure containment + pressure suppression system + reduced power density + increased thermal inertia.	Limiting radioactivity release - A, B, C, D	5

TABLE II-8. QUESTIONNAIRE 5 - POSITIVE/ NEGATIVE EFFECTS OF PASSIVE SAFETY DESIGN FEATURES IN AREAS OTHER THAN SAFETY.

PASSIVE SAFETY DESIGN FEATURES	POSITIVE EFFECTS ON ECONOMICS, PHYSICAL PROTECTION, ETC.	NEGATIVE EFFECTS ON ECONOMICS, PHYSICAL PROTECTION, ETC.
Integral primary circuit with safety-by-design™	- Core damage frequency (CDF) and large early release frequency (LERF) are reduced, allowing twin-unit or multi-unit power plants; potentially allowing economic benefits from reduced or eliminated emergency planning; - Allows the use of a compact steel containment, minimizing the siting area and improving protection from external events, such as aircraft crash; - Safety-by-design™ results in a reduced complexity of the plant and its safety systems, contributing to reduced costs - Intrinsic security (“security-by-design”) contributes to reduced costs	- Limits power of a single module (counteracted by modular construction of multiple units at site); - Increases reactor pressure vessel size (however, containment and overall footprint are decreased)
All safety-grade systems are passive	- Results in a reduced complexity and improved reliability of the plant, contributing to reduced capital and maintenance costs - Added resilience to sabotage and other malevolent acts	None identified

References

[II-1] INTERNATIONAL ATOMIC ENERGY AGENCY, Status of Advanced Light Water Reactor Designs 2004, IAEA-TECDOC-1391, Vienna (2004).

[II-2] INTERNATIONAL ATOMIC ENERGY AGENCY, Status of Innovative Small and Medium Sized Reactor Designs 2005: Reactors with Conventional Refuelling Schemes, IAEA-TECDOC-1485, Vienna (2006).

[II-3] CARELLI, M.D., et al., The design and safety features of the IRIS reactor, Nuclear Engineering and Design, **230** (2004), 151-167.

[II-4] FINNICUM, D., et al., IRIS preliminary PRA analysis, GLOBAL 2003 (Proc. Int. Meeting, New Orleans, LA, USA, November 16-20, 2003), ANS/ENS.

[II-5] MAIOLI, A., FINNICUM, D. J., KUMUAGAI, Y., IRIS simplified LERF model, ANES 2004 (Proc. Int. Conf., Miami, FL, October 3-6, 2004).

[II-6] INTERNATIONAL ATOMIC ENERGY AGENCY, Safety of Nuclear Power Plants: Design, Safety Standards Series, No. NS-R-1, IAEA, Vienna (2000).

[II-7] INTERNATIONAL ATOMIC ENERGY AGENCY, Defence in Depth in Nuclear Safety, INSAG-10, Vienna (1996).

[II-8] INTERNATIONAL ATOMIC ENERGY AGENCY, Advanced Nuclear Plant Design Options to Cope with External Events, IAEA-TECDOC-1487, Vienna (2006).

[II-9] INTERNATIONAL ATOMIC ENERGY AGENCY, Safety Related Terms for Advanced Nuclear Plants, IAEA-TECDOC-626, Vienna (1991).