THE INTERIM FUEL STORAGE FACILITY OF THE PBMR

WF Fuls[1] (wim@ist.co.za); C Viljoen[2]; C Stoker[3]; C Koch[4]; EH Mathews[5]
Integrators of Systems Technology (IST) Nuclear Power Systems, P.O. Box
95355, Waterkloof, 0145, South Africa

ABSTRACT: The PBMR's spent fuel and partially burnt fuel are stored in the Sphere Storage System (SSS), which acts as the interim fuel storage facility of the plant. It is unique in the world since the fuel is stored in bulk containers (called storage tanks), each capable of holding more than 500 000 spheres for a period of about 80 years. The SSS has the ability to move the contents of one tank to another tank, and to return partially burnt fuel back to the reactor core for re-fuelling. The storage tanks are individually sealed carbon steel pressure vessels in order to contain any released fission products that have diffused from the fuel spheres. Sub-criticality is achieved through the geometric cross section of the tank, and by taking credit for fuel burn-up. Protection from the corrosive environment where the PBMR Demonstration plant will be built is achieved by actively cooling the tank with clean dry air. In the event of an active cooling failure, louvres open automatically and cooling is done passively via natural convection making use of the chimney-effect. Sufficient radiation protection is provided around each tank to facilitate maintenance and inspection operations where needed. The design of the SSS is nearing the end of its basic design phase, and for some components, detail design work has already commenced. The design complies with all spent fuel storage requirements and is seen as a cost-effective solution for the interim storage of PBMR spent fuel.

KEY WORDS: PBMR; Spent Fuel Storage; Dry storage; Sphere Storage System; Storage Tank

0. INTRODUCTION

The Pebble Bed Modular Reactor (PBMR), being developed in South Africa, is a new high temperature reactor designed for commercial use. This reactor makes use of spherical fuel elements with similar geometry as those used in the HTR10 of China and the AVR and THTR of Germany [1]. One of the primary support systems of the PBMR is the Fuel Handling and Storage System (FHSS). IST Nuclear Power Systems (Pty) Ltd. Has a contractual agreement for the design and supply of the FHSS for the PBMR Demonstration Plant, as well as the first ten production PBMR modules.

The "storage" part of the FHSS is performed by the Sphere Storage System (SSS). This system also serves as the interim storage facility of the PBMR after end of plant power generation. For this reason the SSS can function autonomously from the rest of the FHSS.

---

[1] Senior Design Engineer, ISTN and PhD Student, University of North-West

[2] CFD Engineer, PBMR

[3] Neutronics Specialist, PBMR

[4] Metallurgical Engineer, ISTN

[5] PhD Study Promoter, University of North-West

In most nuclear power plants, the spent fuel is first loaded into a water pool for an initial cool down period, from where it is transferred to an interim storage facility. The latest trend is that the interim storage facilities make use of dry storage. Due to the comparatively low power density of a PBMR fuel element, it is possible to load the spent fuel directly into a dry storage container for interim storage, thereby eliminating the water pool (similar to the THTR and HTR10).

The SSS design is thus based upon the philosophy that once discarded, the spent fuel goes directly into a dry storage container for storage of up to 80 years before final disposal. This is based upon a plant power generation life of 40 years, and an additional 40 years of interim storage.

1. FUNCTIONS AND DESIGN REQUIREMENTS

1.1 Operational Functions

The SSS has three primary operational functions to perform. They are:

(a) *Store all spheres discharged from the Fuel Handling System* – This implies that the SSS should have sufficient capacity to store the total amount of spent fuel generated during the life of the plant. In addition, it should be able to store the graphite spheres used for start-up, as well as partially burnt fuel (called used fuel) when maintenance is performed on the reactor core structures. The total storage capacity of the SSS is more than 6 million spheres. The spheres should be stored for a maximum of 80 years.

(b) *Return used fuel or graphite to the core when required* – This function is needed when maintenance on the reactor core structures is required. Used fuel is loaded into a storage tank, and returned later during re-fuel. Graphite spheres are required to fill the core before used fuel can be introduced.

(c) *Redistribute the contents of one storage tank to another* – This function will be used if maintenance on a storage tank is required. It will also be used to transfer the spheres to a transport cask for final disposal.

1.2 Design requirements

The following design requirements were laid down for the design of the SSS. These requirements are also in line with the international guidelines for the design of spent fuel storage facilities [2]. The design solution to each requirement is presented in the successive paragraphs, which are extracts from the basic design report of the complete system.

(a) *Containment of fission products* – The principle of Defense-in-Depth is employed to ensure that no significant release of fission products occurs that could lead to radiation doses above specified limits to workers or the public. The bulk of fission products is already contained within the coated particles and graphite matrix of the fuel sphere itself. However the graphite dust originating from sphere abrasion is still contaminated. There is also contamination in the helium gas, this contamination is, however, comparatively small.

(b) *Sub-criticality of the fuel spheres* – An effective multiplication factor $k_{eff} < 0.95$ is set for the design. Achieving this target is accomplished with conservative but realistic assumptions of all factors contributing to the reactivity worth of the stored sphere volume.

(c) *Removal of decay heat* – A target maximum temperature of 350°C is set for any stored fuel sphere. This target is lower than the temperature at which graphite oxidizes with an exothermal reaction. The goal is to have 100% reliable cooling, making use of passive systems.

(d) *Radiation protection* – Protection from radiation exposure to the worker and public is according to national and international ALARA goals.

(e) *Cost efficiency of components and operation* – Because the PBMR is a reactor designed for commercial power generation, trade-off studies are done in order to ensure that the most cost-effective design is chosen.

2. CONTAINMENT DESIGN

PBMR has opted for bulk storage containers for the spent fuel and used fuel. In other words PBMR fuel will not be stored in small, movable containers as were used in the AVR, THTR, and currently the HTR10. This bulk storage philosophy is unique in the world, and was chosen based upon a cost estimate done during the concept phase of the PBMR. The building layout provides for 12 such containers (called storage tanks), each having a capacity of more than 500 000 spheres.

The storage tanks are cylindrical pressure vessels (FIGURE 1), with an operating pressure of 1MPa. However, the fuel is stored in helium at a pressure slightly above atmospheric pressure in order to identify a leakage. Each storage tank is a thin-walled vessel, with a nominal height of 18m and a diameter of 3.1m. It is suspended vertically from the top by a ring support, and has an unloading device at the bottom. The tank has an inlet sphere pipe penetrating the top dish end, as well as an outlet pipe coming from the unloading device at the bottom.

The storage tank acts as a final containment barrier. All dust and radioactive gases are trapped by the pressure boundary of the vessel. When not in use, the inlet and outlet pipes are disconnected from the Fuel Handling System and blanked off.

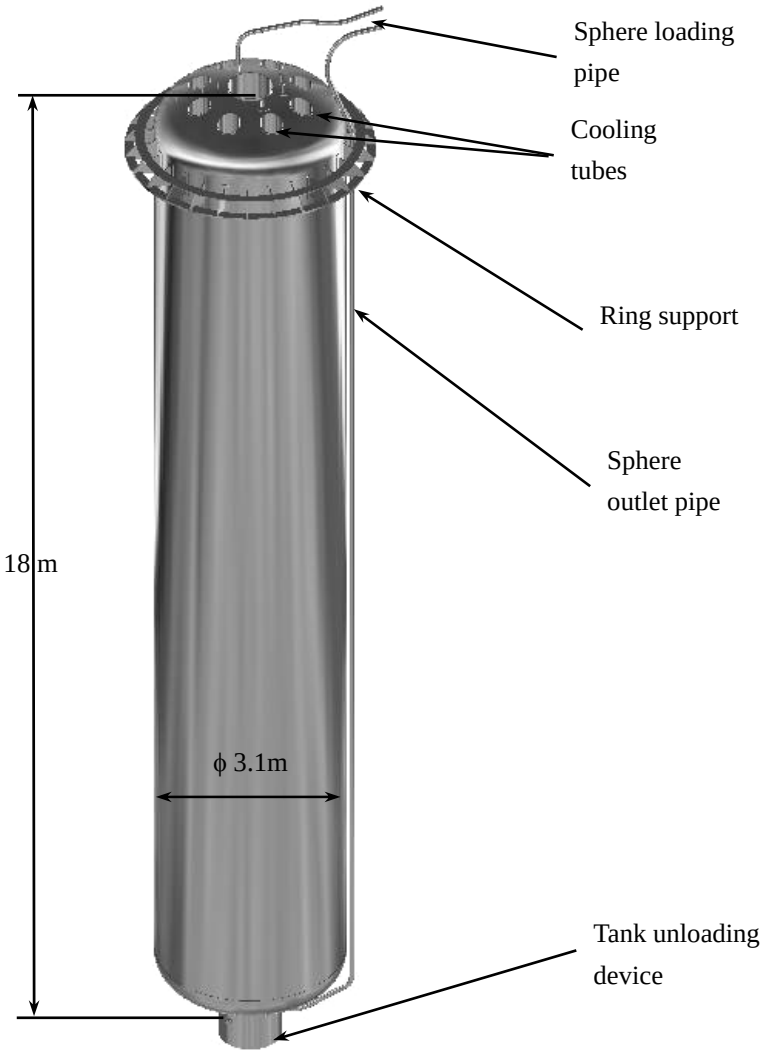

FIGURE 1. Pictorial view of a typical storage tank.

3. CRITICALITY DESIGN

Sub-criticality of the stored fuel spheres is achieved through a combination of burn-up credit and fuel volume geometry. Inside each storage tank are a number of large diameter tubes running from the top to the bottom of the tank. These tubes keep the fuel in a specific geometry such that the steel of the tube walls is sufficient to keep the volume sub-critical. In other words, there is no additional neutron absorbing material in the storage tanks other than the steel itself.

Credit is taken for the fact that the fuel has undergone a minimum burn-up. Burn-up credit for the storage tanks is taken at 20% less than the average burn-up of the core. This ensures that the full contents of a nuclear reactive PBMR core can be stored in a storage tank without it reaching criticality. Sub-criticality is calculated for the case where optimum water moderation exists between the spheres, as well as for the highest physical packing factor that can exist in a finite volume of spheres.

The steel tubes inside the tank also provide a means of cooling the fuel volume. For this reason the choice of tube geometry and position is driven more by thermal considerations than criticality. As a result, the effective multiplication factor of a full storage tank is well below the 0.95 requirement.

FIGURE 2 shows a typical cross-sectional geometry of the storage tank.

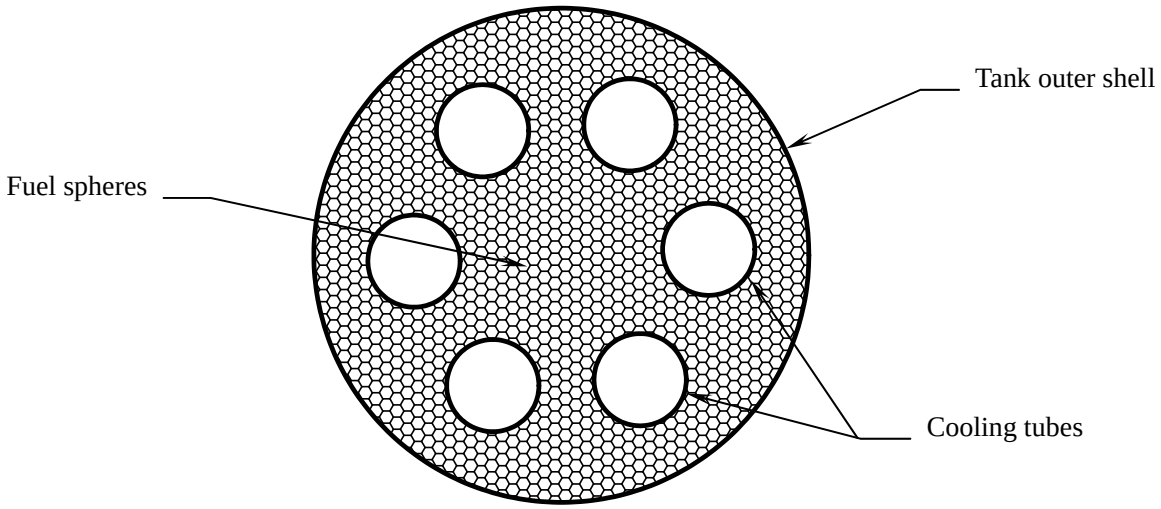

FIGURE 2. Typical storage tank cross-sectional geometry.

4. CORROSION PROTECTION

It is generally accepted that passive heat removal is the safest way to cool the fuel. To achieve passive cooling the storage tanks need to be exposed to air from the external environment in order for natural convection to take place. For the PBMR demonstration plant, this environment will be aggressive coastal conditions. In addition to this, the gamma radiation originating from the stored fuel spheres causes radiolysis of the air, resulting in extremely corrosive elements such as Nitric acid and Ozone.

An extensive search was done to find a cost-effective material or coating system that can last for a period of at least 80 years in such an environment without repair. Because the storage tanks are pressure vessels, designed according to the ASME boiler and pressure vessel code, the design is restricted to what the code allows. Stainless steels are not an option since they are subject to stress corrosion cracking in the chlorine-containing environment. Not even expensive duplex steel can be guaranteed to last for 80 years. Most coatings are often further degraded by radiation resulting in a life of 10 to 20 years. Many cladding or plating materials are not sufficiently resistant to the radiolysis products, and may peel off from the base material over a period of 80 years. The manufacturing processes are also limited and expensive. To date, no cost-effective material solution could be found for tanks exposed to 80 years coastal and radiolysis conditions.

It was therefore decided to address the problem rather than the cause, by removing the corrosive elements from the cooling air. This is achieved by cooling the tanks within a closed cooling loop. In this closed loop the air can be conditioned to certain levels to prevent significant corrosion on vessel materials such as normal carbon steel. Corrosion tests showed that, by significantly reducing the relative humidity, very little corrosion occurs on carbon steels containing a moderate chrome content, even in the presence of large radiolysis product concentrations.

If the tanks are cooled in a closed loop, a heat exchanger will be needed to transfer the decay heat from the closed loop to an external open loop. The flow loss through the heat exchanger is too high for sustained natural circulation; therefore electric fans are needed to circulate the air. However, the

ultimate cooling should be passive, therefore it should be possible to bypass the heat exchanger to allow external air to directly cool the tank in the event of a forced cooling system failure. This is called the passive fallback mode. In this mode, corrosion could take place on the tanks, and it is thus paramount that the system be restored back to the closed loop cooling condition within reasonable time. The advantage of having a passive fallback mode is that the active cooling system need not carry a safety classification.

5. DECAY HEAT REMOVAL

5.1 Storage tank heat load

The amount of decay heat to be removed per tank depends upon the type of spheres inside the tank, as well as the decay age of the spheres. The total heat load determines the outlet temperature of the cooling air, and the capacity of the heat exchangers needed. A higher heat load requires a higher mass flow in order to reduce the outlet temperature. On the other hand, the heat density (kW/m^3) inside the tank governs the maximum fuel temperature. To reduce the maximum fuel temperature, higher airflow velocities are required around the tank and inside the cooling tubes in order to increase the convective heat transfer from the tank to the air.

A tank completely filled with spent fuel can have a maximum heat load of about 140kW. The heat accumulates gradually during the 3.5 years it takes to fill the tank (refer to FIGURE 3). The maximum heat density inside the tank is around $7kW/m^3$, which corresponds to the most recently-added spent fuel spheres. This heat density exists inside the tank for the full duration of tank filling. Because of the high heat density, sufficient airflow is required to keep the fuel temperature below limits, even though the total heat load may be small at low fill levels.

Once the tank is completely filled, the heat load drops exponentially, so that it is possible to reduce the cooling by a quarter after only 3 years. This reduced flow could then be maintained for the remainder of the interim storage period, which may range from about 75 years for the first tank, to 35 years for the last tank.

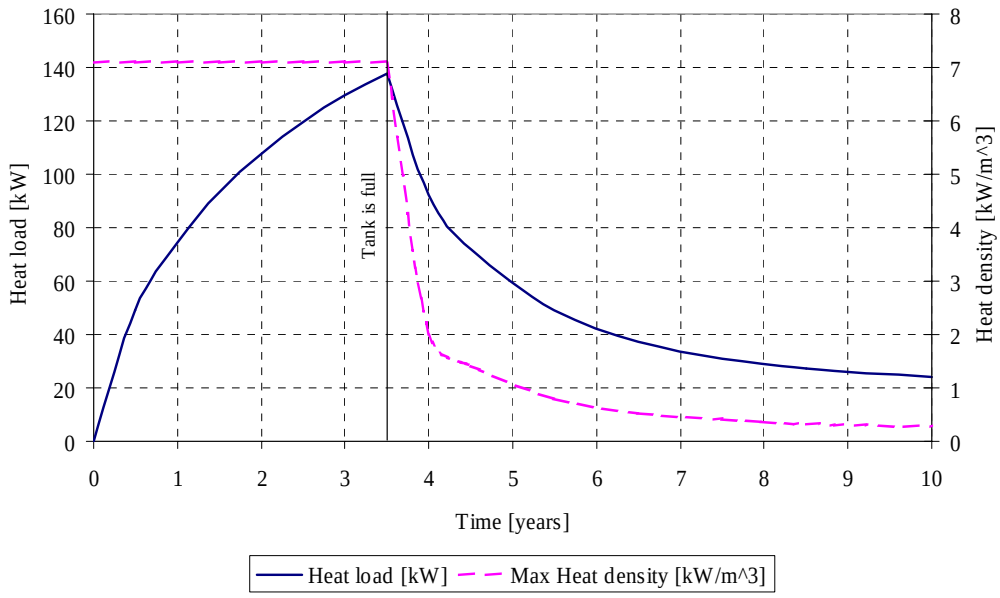

FIGURE 3. Heat load and heat density of a tank containing spent fuel as it is being filled, and for a period thereafter.

If a storage tank is filled with used fuel (i.e. fuel coming directly from the core during a complete core de-fuel), the heat load looks significantly different. There will be a delay of around ten days from the time the reactor is shut down to the time the first spheres are unloaded from the core. De-fueling will then take about 20 days. The total heat load can reach a maximum of more than 600kW at the end of the 20 days (refer to FIGURE 4). Since all the spheres have on average the same decay age, the heat density inside the tank starts at about 11.0kW/m^3 and drops to 7kW/m^3 when de-fueling is complete. The higher heat load and heat density require higher cooling air mass flows as opposed to spent fuel cooling.

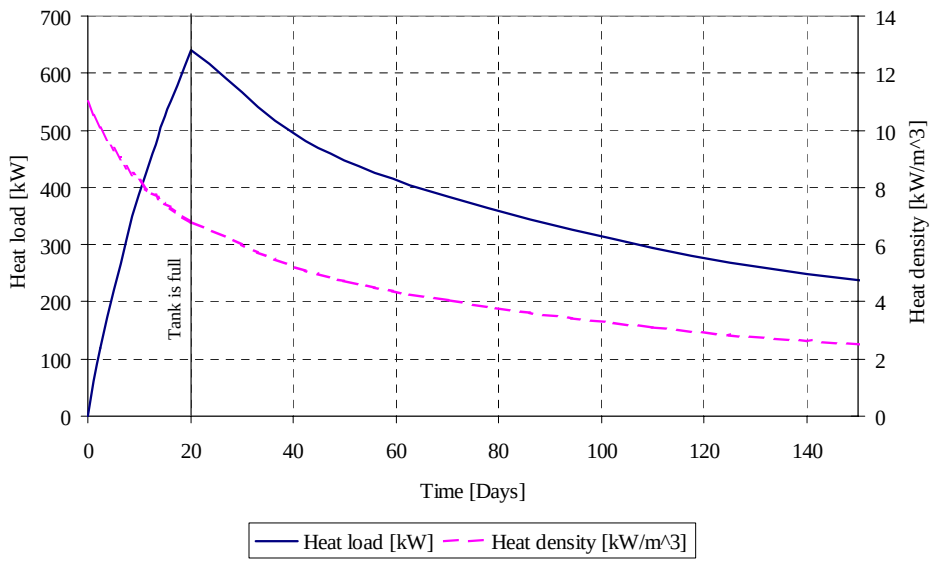

FIGURE 4. Heat load and heat density of a tank containing used fuel as it is being filled, and for a period thereafter.

Used fuel will be kept in a storage tank for the duration of reactor maintenance, which is not expected to take longer than three months. Reactor maintenance is also planned only once during plant operational life. Compared to the 80 years storage of spent fuel, the storage of used fuel for 3 months is very short. As discussed in paragraph 0, cooling of the tanks will be done in a closed loop with purified air to ensure a tank life of 80 years. However, the corrosion due to unconditioned external air over a period of 3 months is significantly less, so that it is not necessary to cool a tank containing used fuel in a closed loop. This eliminates the need for a much larger heat exchanger for used fuel cooling.

In order to reduce the amount of corrosion during open loop cooling, a filter is employed at the inlet. This filter will remove corrosive particles such as salts from the cooling air. However, moisture cannot be removed, and therefore corrosion will be more than for the closed loop configuration. The open loop cooling configuration will therefore only be used for tanks with a heat load that is more than the heat exchangers can handle.

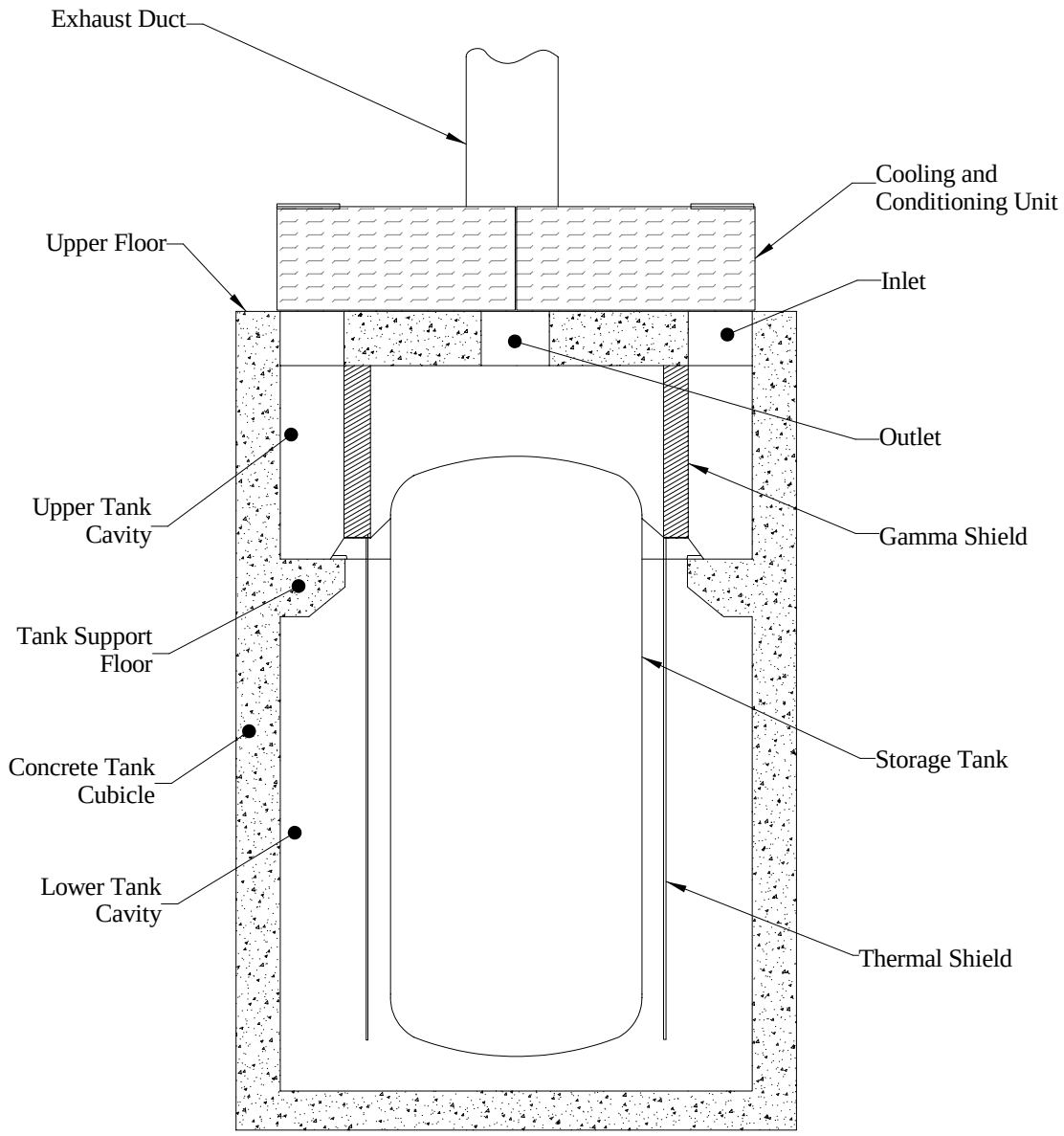

FIGURE 5: Schematic layout of the storage tank in the cubicle.

5.2 Tank cubicle layout and cooling airflow

Each storage tank is located in its own concrete cubicle (see FIGURE 5). The cubicle is split into an upper and lower cavity at the level of the tank support. At the upper cavity is the gamma shield, which extends from the tank support upward to the upper floor. This shield allows human access to the upper cavity, even when the tank contains fuel. There are two rectangular air inlets at the upper floor, and one central outlet. The gamma shield separates the inlet and outlet cooling airflow.

The ring support at the top of the tank is designed to allow air passage through it. The cold inlet air therefore directly cools the support as it moves downward to the lower tank cavity. There is a thermal shield laced at a distance around the tank extending from the ring support down to the bottom. This shield prevents thermal radiation from the tank to the surrounding concrete structures, and also directs the cooling air downwards from the top of the cavity and upwards around the tank.

At the bottom of the tank cubicle, the cooling air splits up into the cooling tubes inside the tank and the gap between the tank and the thermal shield. All decay heat is absorbed by the cooling air as it flows upward along the tank. The flow collects at the top of the tank and exits at the central rectangular outlet in the upper floor.

The tubes inside the tank, along with the gap between the thermal shield and the tank act as vertical heated chimneys. As a result, the storage tank can be easily cooled by passive means. It has been demonstrated by Computational Fluid Dynamic analyses that even at a low heat load and fill level, flow velocities in excess of 2 m/s are established inside the tubes.

The flow path as described above will exist for active or passive cooling, and for all heat loads that could exist inside the tank. Even when the air was initially stagnant, it would start flowing in the direction as described. This is because the geometrical layout does not allow the air to flow in a different direction. This has been proven by a 2D passive cooling demonstrator experiment. Even if the flow were forced in the reverse direction with a fan, it would immediately change direction when the fan is switched off.

5.3 Cooling configurations

At the top of the upper floor are two Cooling & Conditioning Units (CCUs) for each storage tank. These units perform all the cooling functions required for the tank, as well as the conditioning of the closed loop air to prevent corrosion of the tank. The CCUs face each other as shown in FIGURE 5, thereby straddling the two inlets and the central outlet in the floor below.

The CCUs can be configured in four kinds of cooling modes, namely:

- Closed Loop Active Cooling
- Open Loop Active Cooling
- Open Loop Passive Cooling
- Closed Loop Conditioning

The heat load and heat density inside the storage tank determine the cooling mode required from the CCUs. FIGURE 6 shows the relation between the tank heat load and the specific cooling configuration.

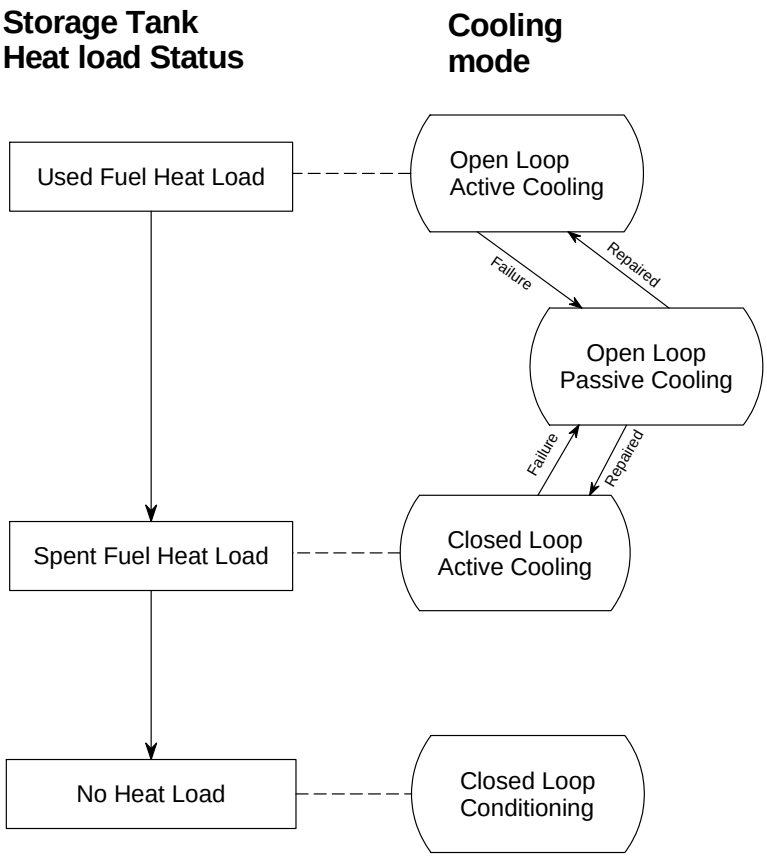

FIGURE 6. Cooling mode mapping

The Open Loop Active Cooling configuration is used for tanks with a heat load above 150kW such as a tank containing used fuel. In this configuration the CCUs supply a high amount of filtered air to the cavity. There is no heat exchanger, thus the hot outlet air flows directly through the exhaust duct.

The Closed Loop Active Cooling will be used for tanks with a heat load below 150kW such as tanks containing spent fuel, or the last core after an initial cool down period. In this configuration, the CCUs circulate the clean air through the tank cubicle. The air is maintained at a high purity level by continuously passing a portion of the air through an air-conditioning device. The closed loop air is passed through an air-to-air plate heat exchanger. The air on the external side of the heat exchanger is drawn from outside and discharged to the exhaust duct.

For either the Open or Closed Loop Active Cooling, there is an associated Open Loop Passive Cooling fallback configuration. For this configuration, louvres inside the CCU are set in such a way as to bypass the filter and/or heat exchanger. These louvres are kept in place during active cooling by means of electro-magnets. During a total power failure of both CCUs, they will automatically fall open to the passive cooling configuration.

During Open Loop Passive Cooling, heat removal of the tank is done passively through natural convection and can be sustained for as long as it takes to restore the system to the original active cooling configuration. However, the passive cooling mode is not a long term cooling mode since the

tank is exposed to corrosive elements during that time. CFD analyses showed that passive cooling of the tanks is possible for a tank filled with used fuel, as well as for a tank filled to less than 5% of its capacity with spent fuel.

The CCUs can operate independently from each other, thus allowing maintenance on one CCU while the other is still operational. It also enables the operator to take one CCU out of service when the heat load has dropped sufficiently. Its components can then be moved to another tank requiring higher cooling capability, such as the next storage tank to receive spent fuel. In this way, the total capital and operational cost over the 80 years of storage can be minimized. It should be noted, however, that it is up to the plant operator to decide whether to reduce the cooling capability or not. The CCUs can be operated for the full 80 years at maximum capacity if so required.

If the tank does not contain any heat-generating medium, such as graphite spheres or an empty tank, the CCUs are configured in the Closed Loop Conditioning mode. A small amount of air is continuously circulated through the cubicle, and through the air-conditioning device. In this way, the tank is protected from corrosion at all times.

5.4 Building inlets and outlets

The storage tank cubicles form part of the module building, and are located in the bottom rear end. The tank support floor lines up with ground level, and the walls of the room above the upper floor (where the CCUs are located) are part of the outer wall of the building. These walls have large openings to the outside environment. The room therefore acts as the air supply plenum for all the CCUs. Each CCU independently draws the amount of cooling air needed from the room to cool its respective tank. It is not possible to completely block the cooling air supply to a tank by an external event, because there are multiple inlets from the outside to each CCU.

The openings are designed to withstand an external impact, and are placed in such a way as to ensure that the static pressure of the room is not affected by winds from any direction around the building. There are de-misters located at each opening to trap moisture droplets coming from the outside.

The exhaust duct situated at the outlets of the CCUs runs vertically to the top of the building, and acts as a chimney during passive cooling. The ducts are protected from damage by a secondary duct. This secondary duct can also act as a chimney if the primary duct has failed for some reason.

The ducts open into a common cavity at the top of the building. This cavity spans the full width of the building. It is thus not possible to block a duct by a single external event. The geometry of the outlet ensures that there is a low pressure at the duct outlets for all external wind directions.

6. ACCESSIBILITY

The wall thickness of the storage tanks is not sufficient to shield the gamma radiation of the spent fuel from a person standing next to the tank. The tank is therefore not directly accessible for manual inspections. However, the upper cavity is sufficiently shielded by the gamma shield thus allowing personnel to enter that area. From there the tank support can be visually inspected using indirect methods.

Provision is made to insert a remotely-operated inspection device through the gamma shield onto a polar crawl beam located below the horizontal part of the gamma shield. This device allows the

operator to inspect more than 80% of the tank's surface for any significant corrosion. The inspection can include various methods, such as camera viewing, ultrasonic depth measurement, etc. Material coupons can also be retrieved for lab analysis of the corrosion products that formed on the coupon. Corrective action can thus be taken long before a breach in the pressure boundary of the tank would occur.

All other equipment requiring maintenance is located either above or below the tank cubicles where sufficient shielding is provided by the concrete floors. These areas are also not contaminated.

7. OPERATION

The storage tanks are connected to the rest of the FHSS by a sphere pipe network. This network acts in a similar way to a railroad-shunting yard. By connecting and disconnecting different flanges and pipe spool pieces, it is possible to define the route a sphere would follow from almost any source to any destination. This pipe network enables the SSS to perform all the sphere flow functional requirements.

Storage tanks are loaded with spent fuel one at a time until they are full. The tank is then disconnected and sealed, and the next tank is connected. During mid-life core structure maintenance, the contents of the core is transferred into a storage tank. Once maintenance is complete, the core is first loaded with pure graphite spheres which were previously stored in a storage tank. When the core has reached its desired fill level, the used fuel is returned to the core. At the same time graphite spheres are extracted from the bottom of the core and returned to their original storage tank.

The contents of one storage tank can also be transferred to another tank if needed. This can be done while spent fuel is being discharged to another storage tank. At any time up to 40 years after plant operation, the contents of all the storage tanks will be transferred to transport casks for final disposal. This process is similar to transferring the spheres to another tank, except that the receiving tank is the transport cask.

8. CONCLUSION

The basic design of the SSS is nearing completion, and, for some components, detail design has already commenced. Although unique in the world, the design of the SSS complies with all nuclear requirements, fulfils all process functions, and is believed to be a cost-effective interim storage facility for the PBMR.

ACKNOWLEDGEMENT

The authors wish to thank the company PBMR (Pty) Ltd. for approving the publication of the information contained herein. It should be noted that the details of this design are subject to patent registration.

REFERENCES

[1] "PBMR Company Web site"; https://www.pbmr.com; 2004

[2] "Design of Spent Fuel Storage Facilities"; IAEA Safety Series no 116; Vienna; 1994