ADVANCED HIGH-TEMPERATURE REACTOR (AHTR) LOSS-OF-FORCED- CIRCULATION ACCIDENTS

Sydney J. Ball, Charles W. Forsberg
Nuclear Science and Technology Division, Oak Ridge National Laboratory*, Oak Ridge, TN 37831 USA,
E-mail: ballsj@ornl.gov, forsbergcw@ornl.gov

ABSTRACT: The Advanced High-Temperature Reactor (AHTR) is a new reactor concept that makes novel use of several existing technologies, combined to enable higher thermal-power outputs, higher efficiency, and a higher temperature heat source for process heat applications and electricity. The reactor core utilizes prismatic block designs similar to those of the Gas-Turbine Modular Helium Reactor (GT-MHR), and the TRISO coated-particle ceramic fuel universally used for helium-cooled reactors. The ultimate heat sink for safety-grade afterheat removal is a passive system similar to those in both the Modular High-Temperature Gas-cooled Reactor (MHTGR) and the liquid-metal-cooled fast reactor designs. The Brayton cycle is used for electricity production. Initial studies have shown the potential for a considerably greater thermal power output within the confines of a 600-MW(t) GT-MHR-size vessel while still retaining "passive safety" characteristics. A 3-D thermal-hydraulic (T/H) core simulation model developed at Oak Ridge National Laboratory (ORNL) for studying gas-cooled reactor accidents was modified to accommodate AHTR core T/H characteristics. The limitations of the model approximations used for molten salt vs a gas coolant were evaluated, and preliminary results indicate that there is a negligible effect for long-term transients. Initial studies of AHTR loss-of-forced-circulation (LOFC) accident scenarios show that passive cooling mechanisms are sufficient for preventing core heatups that exceed prescribed temperature limitations for fuel failure, coolant boiling, and vessel damage for a 2400 MW(t) reactor.

KEY WORDS: Nuclear Energy, Electricity, Hydrogen, Brayton Cycle, Accident Analysis

0. INTRODUCTION

A new type of high-temperature reactor, the Advanced High-Temperature Reactor (AHTR), has as its goal a combination of three lofty technical characteristics: high temperature, passive safety, and large size. The AHTR and its potentially unique characteristics arise from the combination of several

---

[1] *Oak Ridge National Laboratory, managed by UT-Battelle, LLC, for the U.S. Department of Energy under contract DE-AC05-00OR22725.

[2] The submitted manuscript has been authored by a contractor of the U.S. Government under contract DE-AC05-00OR22725. Accordingly, the U.S. Government retains a nonexclusive, royalty-free license to publish or reproduce the published form of this contribution, or allow others to do so, for U.S. Government purposes.

existing technologies. Some of the AHTR's key features include the high-temperature, ceramic TRISO fuel developed for HTGRs in a prismatic (block) type core, a molten salt (rather than helium) primary coolant, and a passive ultimate heat sink for dissipation of decay heat.

The AHTR uses the one type of nuclear fuel that has been demonstrated for commercial use at high temperatures: the graphite-matrix coated-particle fuel (TRISO). Historically, helium has been the only coolant considered for high-temperature reactors; however, TRISO fuel is compatible with molten fluoride salts. The compatibility of fluoride salts with graphite has been demonstrated for over a century in the aluminum industry, utilizing molten fluoride salts at ~1000°C. Instead of active safety systems, which require multiple active safety-grade components such as diesel generators, valves, electronic circuitry, motors (and sometimes operators) to ensure safety in the event of an accident, AHTR utilizes mainly passive safety systems. Passive safety systems have the potential for greater safety assurance and lower costs. The combination of a high-temperature ceramic fuel and core structure, and a high-temperature low-pressure coolant helps to enable the concept of large high-temperature reactors with passive safety systems. The ultimate maximum power output of the AHTR will depend in part on its response to postulated accident scenarios. Predictions of the response of the AHTR to loss-of-forced-circulation (LOFC) accidents are a major part of such investigations. Included here are a brief description of the current version of the AHTR concept, the T/H models, the resulting predicted behavior during LOFCs, and sensitivity studies indicating the importance of various design features and other assumptions.

1. AHTR DESCRIPTION

The AHTR (Forsberg, et al. 2003, 2004; Ingersoll, 2004) is a high-temperature reactor (Fig. 1, Table 1) that uses coated-particle graphite-matrix fuels (TRISO) and a molten-fluoride-salt coolant. The fuel is the same as that used in modular high-temperature gas-cooled reactors (MHTGRs). Design limits placed on this fuel are typically in the range of ~1600ºC during accidents. The proposed mixture of fluoride salts has a freezing point of ~400ºC and a boiling point of ~1400ºC at atmospheric pressure. The reactor operates at near-atmospheric pressure. At operating conditions, molten-salt heat-transfer properties are similar to those of water. Heat is transferred from the reactor core by the primary molten salt coolant to an intermediate heat-transfer loop, which uses a secondary molten salt coolant to move the heat to the turbine hall. In the turbine hall, the heat is transferred to a multi-reheat nitrogen or helium Brayton cycle power conversion system. For hydrogen production, heat is also transferred to a thermochemical hydrogen production facility, which converts water and high-temperature heat to hydrogen (H_2) and oxygen.

The AHTR differs from the molten salt reactor (MSR), in which the uranium fuel and resultant fission products are dissolved in the salt. In the 1950s and 1960s, the United States began development of MSRs for military aircraft propulsion (Fraas, 1956) and then for breeder reactors that produced electricity (*Nucl. Appl. Technol.*, 1970). Two experimental reactors were built at ORNL and successfully operated. In contrast, the AHTR uses a solid fuel and a "clean" molten salt coolant.

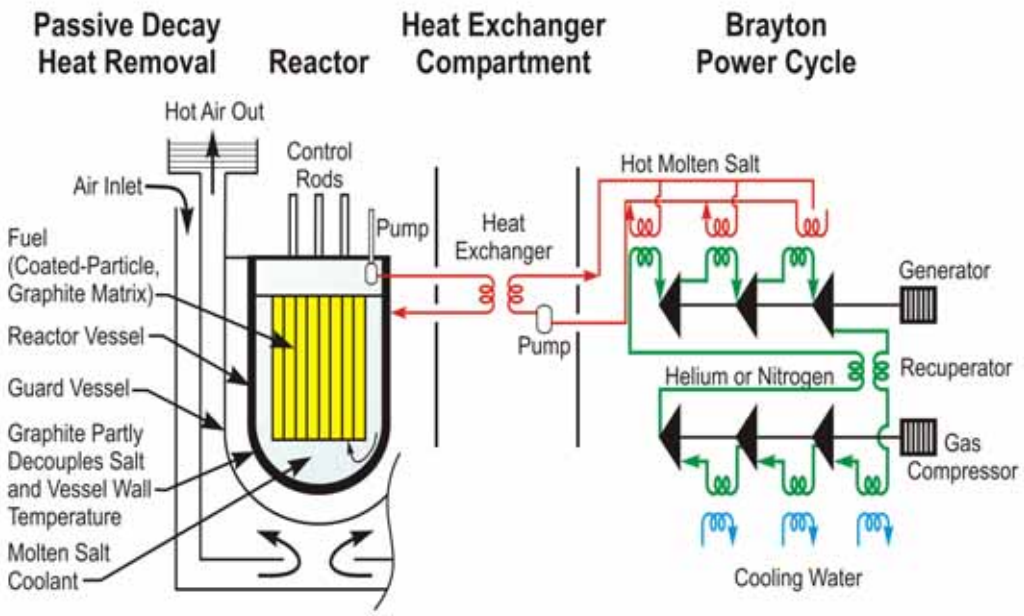

FIG.URE 1 AHTR schematic (electricity production)

TABLE 1 AHTR Preconceptual Design Parameters

Power level	2400 MW(t)	Power cycle	3-stage multi-reheat Brayton
Core inlet/outlet temperature (options)	900ºC/1000ºC 700ºC/800ºC 670ºC/705ºC	Electricity (output at different peak coolant temperatures)	1357 MW(e) at 1000ºC 1235 MW(e) at 800ºC 1151 MW(e) at 705ºC
Coolant (several options)	$2^7LiF\text{-}BeF_2$ $(NaF\text{-}ZrF_4)$	Power cycle working fluid	Nitrogen (helium longer-term option)
Fuel Kernel	Uranium carbide/oxide	Vessel Diameter	9.2 m
Enrichment	10.36 wt % ^{235}U	Height	19.5 m
Form	Prismatic	Reactor core Shape	Annular
Block diam.	0.36 m (across flats)	Diameter	7.8 m
Block height	0.79 m	Height	7.9 m
Columns	324	Fuel annulus	2.3 m
Decay heat system	Air-cooled	Power density	8.3 W/cm^3
Volumetric flow rate	5.54 m^3/s	Reflector (outer)	138 fuel columns
Coolant velocity	2.32 m/s	Reflector (inner)	55 fuel columns

The AHTR facility (Fig. 2) is similar to the S-PRISM sodium-cooled fast reactor designed by General Electric. Both reactors operate at low pressure and high temperature and thus have similar design constraints. The AHTR's 9.2-m diameter vessel is the same size as S-PRISM's, judged to be the largest practical size of a low-pressure reactor vessel. Vessel size is a major determinant of the power output. In the AHTR initial design studies, it was assumed that the fuel and power density (8.3 W/cm^3) were essentially identical to the MHTGR's. The power density and design power level might eventually be increased because of the better heat transfer associated with a liquid coolant vs traditional gas coolants.

For the MSR effort, major R&D areas included developing code-qualified materials (Hastelloy-N) for long-term operating temperatures up to 750ºC, pump test loops, and a wide variety of other developmental work, resulting in a high level of confidence that the technology (pumps, materials, etc.) exists for an AHTR operating at these temperatures. Existing materials may allow design of plants at temperatures of up to ~800ºC. However, major materials development work would be required for a 1000ºC coolant exit temperature.

In the current design, the AHTR has an annular core through which the coolant flows downward. The inlet coolant flows upward through the nonfuel graphite section in the middle of the core. The coolant pumps and their intakes are located above the reactor core; thus, the reactor cannot lose its coolant except by failure of the primary vessel. The guard vessel is sized so that even if the primary vessel fails, the core remains covered with molten salt. Both vessels are located in a silo to limit the potential for a loss of salt. Maintaining the core covered with molten salt is a major (and essential) assumption for passive safety in the AHTR.
The reactor core physics is generally similar to that for the gas turbine-modular helium reactor (GT-MHR) because the molten salt coolant has a low neutron-absorption cross-section. Reactor power is limited by a negative temperature reactivity coefficient, control rods, and other emergency shutdown systems.

For decay heat removal, the AHTR uses a passive reactor vessel auxiliary cooling (RVAC) system (Forsberg, et al. 2004) similar to that developed for decay heat removal in the General Electric sodium-cooled S-PRISM (Boardman, 2002). The reactor and decay-heat-cooling system are located in a below-grade silo. A siphon break upstream of the in-vessel hot-leg pumps precludes accidental draining. In this pool reactor, RVAC system decay heat is (1) transferred from the reactor core to the reactor vessel graphite reflector by natural circulation of the molten salts, (2) conducted through the graphite reflector and reactor vessel wall, (3) transferred across an argon gap by radiation to a guard vessel (with the alternative that the gap could be filled by a molten guard salt), (4) conducted through the guard vessel, and then (5) removed from outside of the guard vessel by natural circulation of ambient air.

The RVAC heat removal rate is controlled primarily by the radiative heat transfer through the argon gas from the reactor vessel. Radiative heat transfer increases by the temperature to the fourth power (T^4); thus, a small rise in the reactor vessel temperature (as would occur upon the loss of normal decay-heat-removal systems) greatly increases heat transfer out of the system. In addition, the effective core thermal inertia, per unit volume of the reactor vessel, is much larger than for gas-cooled reactors due to the heat capacity of the molten salt coolant.

03-261

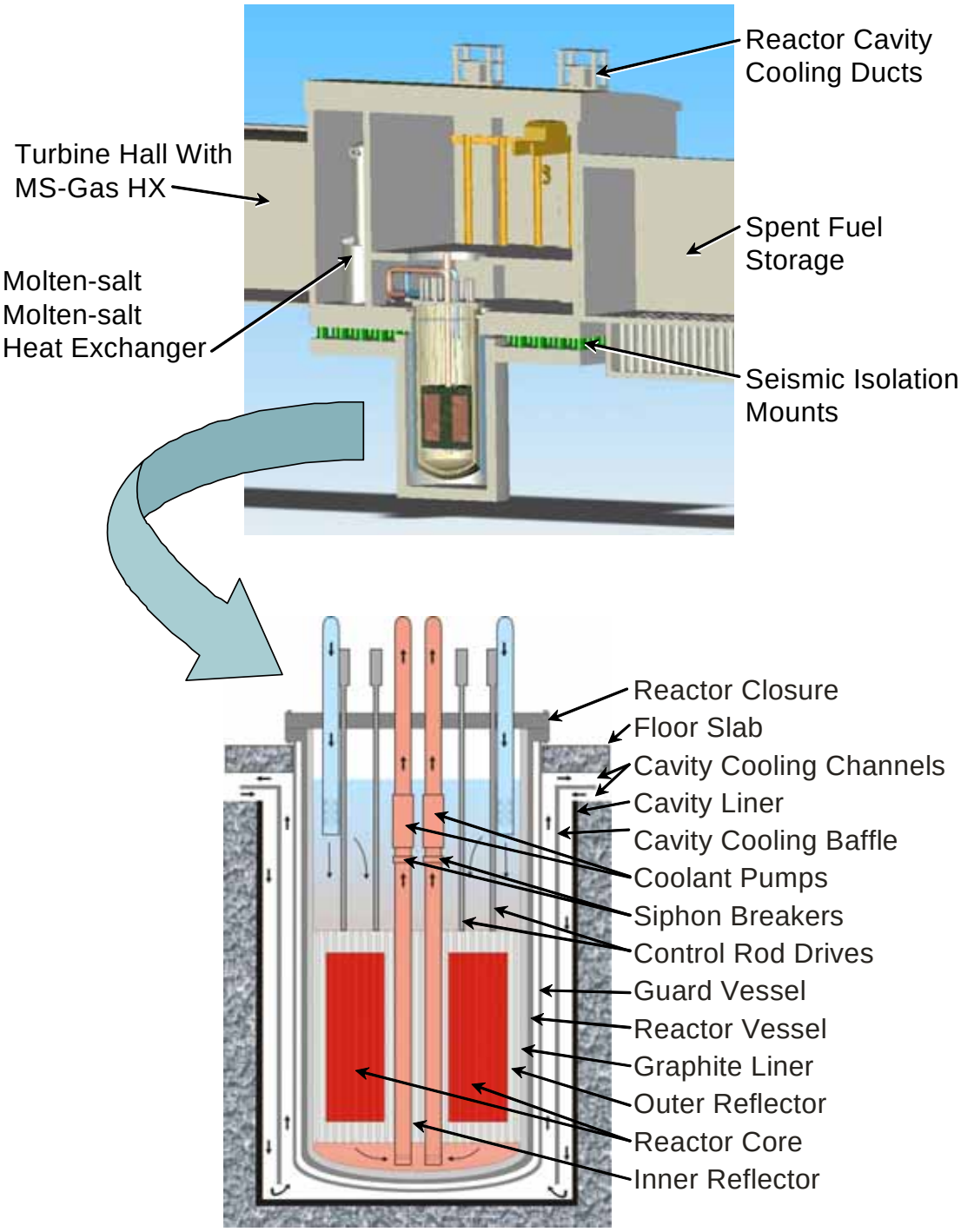

FIGURE 2 Schematic of the AHTR nuclear island and vessel

2. LOSS-OF-FORCED-CIRCULATION (LOFC) ACCIDENTS

Initial studies have shown the potential for a considerably greater thermal power output than the helium-cooled reactor within the confines of a 600-MW(t) GT-MHR-size vessel while still retaining "passive safety" characteristics. These studies were done using GRSAC (Graphite Reactor Severe Accident Code), (Ball and Nypaver, 1999). GRSAC and its predecessor codes have been under development and use at ORNL for more than 25 years, simulating accident scenarios for various MHTGR and other gas-cooled reactor design types. It includes a detailed (~3000 nodes) 3-D T/H model for the core, plus models for the reactor vessel, shutdown cooling system (SCS), and shield or reactor cavity cooling systems (RCCS). There are options to include neutronics (point kinetics) with xenon and samarium poisoning to study Anticipated Transients Without Scram (ATWS) accidents, and it can also model air ingress accidents, simulating the oxidation of graphite (and other) core materials.

The 3-D, hexagonal geometry core thermal model allows for detailed investigations of azimuthal temperature asymmetries in addition to axial and radial profiles. Variable core thermal properties are computed functions of temperature and may also be dependent on orientation and radiation damage. An annealing model for graphite can account for the increase in core thermal conductivity that may occur during heatup accidents.

The primary coolant flow models cover the full ranges expected in both normal operation and accidents, including pressurized and depressurized accidents (and in between), for forced and natural circulation, for upflow and downflow, and for turbulent, laminar, and transition flow regimes. Some of GRSAC's other features are: fast-running (~8000 times real time on a 1.1 GHz PC for non-ATWS gas reactor accidents); an interactive user interface for implementing "design modifications" and on-line/off-line plotting options; automated sensitivity study capabilities (SUN workstation version only); a "smart front end" data input checker; and on-line help and documentation.

GRSAC was adapted to accommodate AHTR core T/H characteristics. The limitations of the model approximations used for molten salt vs a gas coolant were evaluated, and preliminary results indicate that there are negligible differences, at least for long-term transients. Initial studies of AHTR loss-of-forced-circulation (LOFC) accident scenarios show that passive cooling mechanisms are sufficient for preventing core heatups that exceed prescribed temperature limitations for fuel failure, coolant boiling, and vessel damage for rated power levels up to 2400 MW(t).

Figures 3 and 4 show results of a typical AHTR LOFC accident simulation, where loss of forced circulation and a scram occur at time=0. Under accident conditions such as the LOFC accident, natural circulation flow of molten salt up the hot fuel channels in the core and down by the edge of the core rapidly results in a nearly isothermal core with only about a 50ºC difference between the top and bottom plenums (Fig. 3). The calculated peak fuel temperature (Fig. 4) reaches ~1160ºC after ~30 hours, with a peak vessel temperature of ~750ºC at ~45 hours. The crossover point for afterheat power vs cavity cooling occurs at ~35 hours. The average core temperature rises to approximately the same temperature as the hottest fuel during normal operations. These mild accident conditions are indicative of the potential for the passive safety in the AHTR; however, detailed optimization of the reactor power, vessel size, materials, and internals design are yet to be performed.

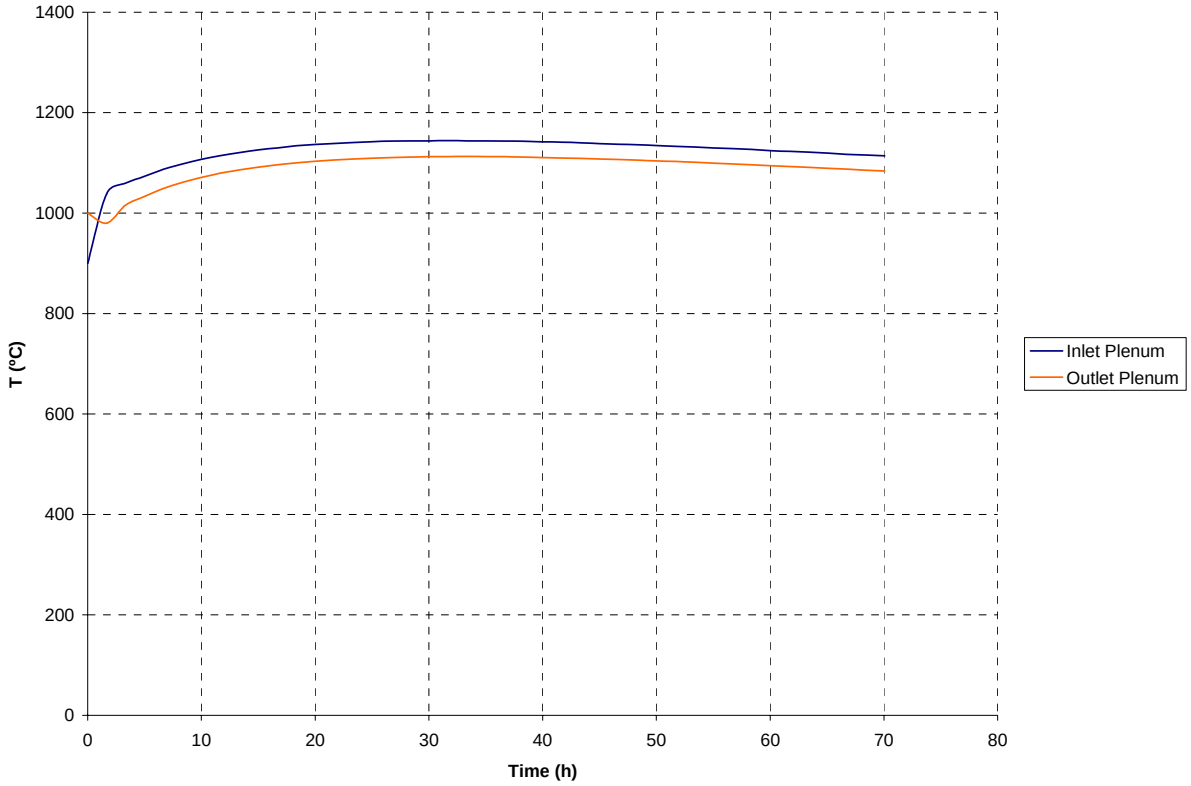

FIGURE 3 GRSAC simulation of AHTR LOFC accident – inlet and outlet plenum temperatures

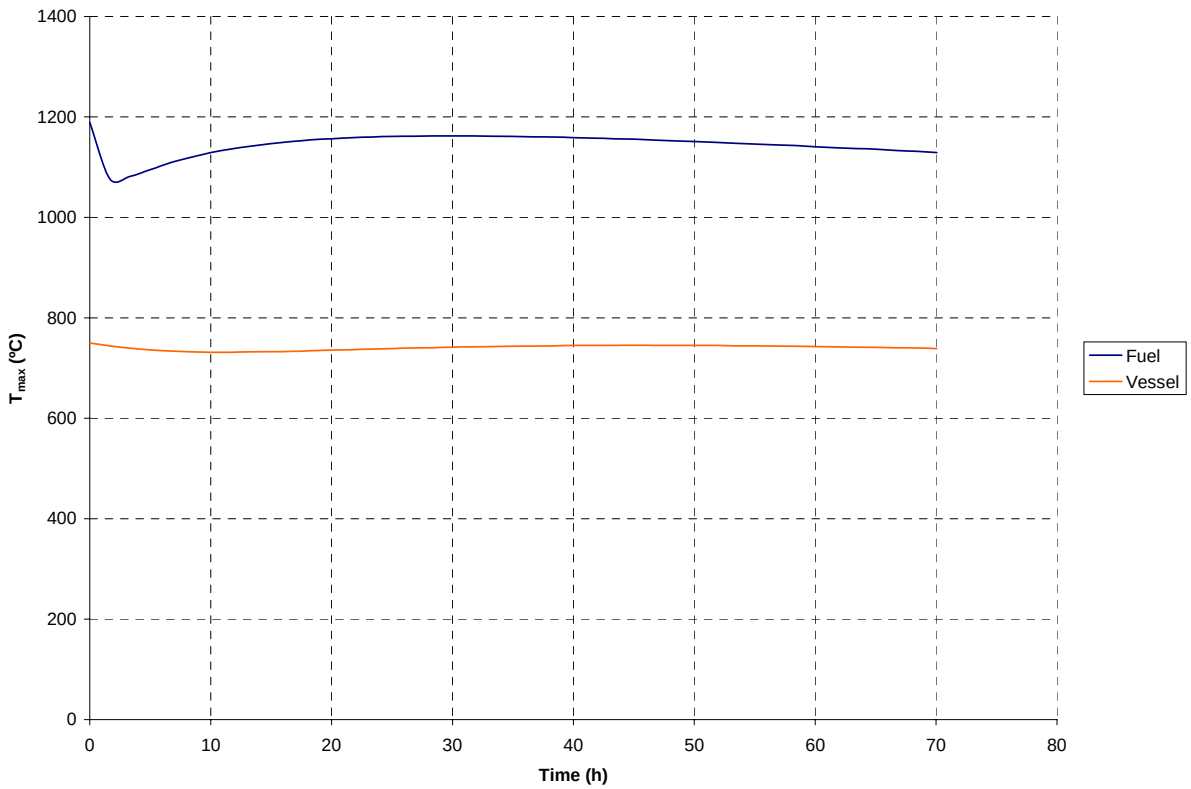

FIGURE 4 GRSAC simulation of AHTR LOFC accident – maximum fuel and vessel temperatures

3. SENSITIVITY STUDIES FOR THE LOFC ACCIDENTS

Sensitivity studies were conducted to determine the relative importance of various design and model parameter assumptions. Most significant were the heat removal characteristics of the RVAC. There are many different RVAC design options available from both S-PRISM and MHTGR concepts, and in general they appear to be capable of meeting the demands. Higher capacity RVACs may be needed if lower vessel temperatures are required. Factors governing the recirculation rates within the core during the LOFC accidents were also significant, where the higher rates tend to lower the difference between inlet and outlet plenum temperatures (and hence lower the maximum fuel and coolant temperatures). These are dependent on the assumed bypass flows (coolant flows that bypass the coolant channels in the fuel elements). Because the relatively high recirculation flows tend to equalize core temperatures, factors such as effective core conductivity, which are very important in peak fuel temperature determinations in gas-reactor LOFC accidents, are not as important in AHTR LOFCs. Another interesting distinction is due to the differences in the coolant viscosity variations with temperature: the viscosity of a gas increases with temperature whereas the viscosity of a liquid decreases with temperature. So the higher viscosity in a hotter gas coolant channel would increase the friction factor and decrease the flow and heat transfer coefficient, making that channel even hotter. So this phenomenon would tend to reduce core temperature differences in molten salt systems in natural-circulation cooling situations. It should be emphasized that, unlike accident scenarios for the GT-MHR, the LOFCs for AHTR assume that there is always (liquid) coolant present in the core.

4. CONCLUSIONS

The AHTR is a new reactor concept in the early stages of design. The unique characteristic of the reactor is its combination of a high-temperature fuel (graphite-matrix coated-particle fuel) with a low-pressure, high-temperature molten-salt coolant. Combining these technologies may enable the construction of large economic high-temperature reactors with both high efficiency and passive safety. The higher temperature limit is controlled by the availability of high-temperature engineering materials. Preliminary calculations using a special adaptation of the ORNL GRSAC (gas reactor) accident code indicates that the AHTR can successfully withstand LOFC accidents for rated power levels up to ~2400 MW(t). Although preliminary scoping studies have been completed for the AHTR, many uncertainties remain for this new reactor concept.

REFERENCES

[1] Ball, S. J., and D. J. Nypaver, *GRSAC Users Manual*, ORNL/TM-13697, Oak Ridge National Laboratory, Oak Ridge, Tennessee, 1999.

[2] Boardman, C. E., et al., “A Description of the S-PRISM Plant,” presented at the *8th Int. Conf. on Nucl. Eng., Baltimore, Maryland, April 2–6, 2000*, ICONE-8168, 2002.

[3] Forsberg, C. W., P. S. Pickard, and P. F. Peterson (2003), “Molten-Salt-Cooled Advanced High-Temperature Reactor for Production of Hydrogen and Electricity,” *Nucl. Technol.*, 144, 289–302.

[4] Forsberg, C. W., P. F. Peterson, and P. Pickard, “Maximizing Temperatures of Delivered Heat from the Advanced High-Temperature Reactor,” *Proc., 2004 International Congress on Advances in*

Nuclear Power Plants (ICAPP '04), Embedded International Topical Meeting 2004 American Nuclear Society Annual Meeting, Pittsburg, Pennsylvania, June 13–17, 2004.

[5] Fraas, A. P. and A. W. Savolainen, *Design Report on the Aircraft Reactor Test*, ORNL-2095, Oak Ridge National Laboratory, Oak Ridge, Tennessee, 1956.

[6] Ingersoll, D. T., C. W. Forsberg, L. J. Ott, D. F. Williams, J. P. Renier, D. F. Wilson, S. J. Ball, L. Reid, W. R. Corwin, G. D. Del Cul, P. F. Peterson, H. Zhao, P. S. Pickard, E. J. Parma, and M. Vernon, *Status of Preconceptual Design of the Advanced High-Temperature Reactor*, ORNL/TM-2004/104, Oak Ridge National Laboratory, Oak Ridge, Tennessee, 2004.

[7] *Nucl. Appl. Technol*, 8 (2) (Entire issue), 1970.