CONF-830446--2

GA-A--17037

DE83 010932

A NEW SMALL HTGR POWER PLANT CONCEPT WITH INHERENTLY SAFE FEATURES — AN ENGINEERING AND ECONOMIC CHALLENGE

by

COLIN F. McDONALD
Project Manager, Advanced Systems

and

DAVID L. SONN
Supervisor, Cost Development Department

Presented at

American Power Conference
Chicago, Illinois

April 18-20, 1983

GA Technologies

DISTRIBUTION OF THIS DOCUMENT IS UNLIMITED

DISCLAIMER

This report was prepared as an account of work sponsored by an agency of the United States Government. Neither the United States Government nor any agency thereof, nor any of their employees, makes any warranty, express or implied, or assumes any legal liability or responsibility for the accuracy, completeness, or usefulness of any information, apparatus, product, or process disclosed, or represents that its use would not infringe privately owned rights. Reference herein to any specific commercial product, process, or service by trade name, trademark, manufacturer, or otherwise does not necessarily constitute or imply its endorsement, recommendation, or favoring by the United States Government or any agency thereof. The views and opinions of authors expressed herein do not necessarily state or reflect those of the United States Government or any agency thereof.

DISCLAIMER

This report was prepared as an account of work sponsored by an agency of the United States Government. Neither the United States Government nor any agency Thereof, nor any of their employees, makes any warranty, express or implied, or assumes any legal liability or responsibility for the accuracy, completeness, or usefulness of any information, apparatus, product, or process disclosed, or represents that its use would not infringe privately owned rights. Reference herein to any specific commercial product, process, or service by trade name, trademark, manufacturer, or otherwise does not necessarily constitute or imply its endorsement, recommendation, or favoring by the United States Government or any agency thereof. The views and opinions of authors expressed herein do not necessarily state or reflect those of the United States Government or any agency thereof.

DISCLAIMER

Portions of this document may be illegible in electronic image products. Images are produced from the best available original document.

A NEW SMALL HTGR POWER PLANT CONCEPT WITH INHERENTLY SAFE FEATURES - AN ENGINEERING AND ECONOMIC CHALLENGE

INTRODUCTION

In today's energy business climate, the challenge to designers of new nuclear plants has never been greater. New concepts must not only embody all of the good features from successfully operated plants but must also incorporate the many required changes stemming from problems that have troubled the industry. Of paramount importance are (1) establishing a safe concept, (2) ensuring that the owner's investment is protected, and (3) achieving acceptable power generation economics. This paper addresses these goals and introduces yet another challenge, namely the design of a small power plant that could be inherently safer and that might have costs less than those indicated by the traditional reverse economy of scale effect.

Studies are in a very early design stage to establish a modular concept High-Temperature Gas-Cooled Reactor (HTGR) plant of about 100-MW(e) size to meet the special needs of small energy users in the industrialized and developing nations. The basic approach is to design a small system in which, even under the extreme conditions of loss of reactor pressure and loss of forced core cooling, the temperature would remain low enough so that the fuel would retain essentially all the fission products and the owner's investment would not be jeopardized. To realize economic goals, the designer faces the challenge of providing a standardized nuclear heat source, relying on a high percentage of factory fabrication to reduce site construction time, and keeping the system simple. While the proposed nuclear plant concept embodies new features, there is a large technology base to draw upon for the design of a small HTGR.

MASTER

SMALL NUCLEAR POWER PLANT BACKGROUND

Small reactors, as defined in this paper, are those with a power output of less than about 400 MW(e). A review of the world list of nuclear power plants (Ref. 1) shows that a large number of small plants are or have been

DISTRIBUTION OF THIS DOCUMENT IS UNLIMITED

operational. The industry started with small plants, and their size increased quite rapidly owing to a combination of increased centralized demand in the industrial nations, availability of larger steam turbines and generators, and the advantage gained by the economy of scale. While these small pioneer plants operated successfully, they have not been duplicated in any large numbers for the domestic or overseas markets, but rather formed the technology base for introduction of large units, up to 1300 MW(e).

The large plants, designed and developed by the highly industrialized nations, have had limited sales success in the developing nations. Many design studies to scale down large plants for the smaller user (Refs. 2-6) have shown that small plants would not be able to penetrate the commercial marketplace because of their attendant high unit, operating, and maintenance costs. Representative examples of small reactor plants are shown in Table I.

Factors dominant in today's design of a small nuclear power plant are institutional considerations, economics, and building on the experience base. The various institutional considerations (e.g., increased safety and financial risk, regulatory changes), not dominant two decades ago during the large expansion of the nuclear industry, are now paramount because the industry is in a transition phase. To restore the confidence of both the public and the investor in the nuclear option, the direction is likely to be towards a forgiving reactor concept (Refs. 7,8).

The relentless upward trend in the cost of constructing nuclear power plants is having an adverse effect on the economic viability of the nuclear option in the U.S. (Ref. 9). A decade ago, fuel and capital costs contributed about equally to the estimated costs of nuclear power generation. Today, capital cost contributes three to four times as much as does the fuel. Construction and regulatory costs, rather than the cost of operation (including fuel cycle), largely determine the economics of nuclear power.

The engineering challenge facing the designer of a small nuclear power plant is formidable. In the 100-MW(e) size, competition is a major factor

TABLE I
SMALL/MODULAR NUCLEAR PLANTS

Country	Organization	Reactor Type	Rating	Application
U.S.A.	GA Technologies	• Peach Bottom 1 HTGR	40 MW(e)	Electricity
		• Fort St. Vrain HTGR	330 MW(e)	Electricity
	Babcock & Wilcox	CNSG	365 MW(t)	Electricity
		CNSS	400 MW(e)	Electricity
	GE/GA/CE/BGI	Modular HTGR	250-300 MW(t)	Process Heat and Cogeneration
Federal Republic of Germany	BBC/Krupp	• AVR I HTR	15 MW(e)	Experimental
	BBC/HRB	THTR (under construction)	300 MW(e)	Electricity
	KFA	AVR II (PNP-50)	50 MW(t)	Experimental (Process Heat)
	KWU	BWR	200 MW(e)	Electricity
	KWU (Interatom)	Modular HTR	170-200 MW(t)	Process Heat and Cogeneration
	HRB	Modular HTR-100	100 MW(e)	Electricity
Japan	Atomic Energy Research Institute	VHTR	50 MW(t)	Experimental Process Heat
United Kingdom	European OECD	• Dragon HTGR	20 MW(t)	Experimental
	Rolls Royce	PWR	125 MW(e)	Electricity
		PWR	28 MW(e)	Subsea Oil Production
France	Alsthom-Atlantique	PWR	125 MW(e)	Electricity and Desalination
	CEA	Thermos	100 MW(t)	District Heat
Sweden	ASEA-ATOM	Secure	200-400 MW(t)	District Heat and Low-Temp Steam
		SECTUS 2 (BWR)	250 MW(e)	Electricity
Canada	AECL	Slow Poke III (Pool)	2 MW(t)	District Heat
USSR	Atomenergo-export	• ARBUS	5 MW(t)	District Heat
		ATU	15 MW(t)	District Heat
		AST 500 (BWR)	500 MW(t)	District Heat
		HTGR (VGR-50)	50 MW(e)	Electricity and Gamma Radiation
		HTGR (VG-400)	300 MW(e)	Electricity and Heat Production

• Small Plants Constructed and Operated.

since viable options exist for coal-fired (fluidized bed combustors), oil-fired, and gas-fired systems. In this paper a new small HTGR plant is proposed which addresses the above challenges.

POWER PLANT ECONOMICS

Based on current cost data, Fig. 1 shows the installed capital cost as a function of plant size for several systems. The capital costs for conventional nuclear and fossil power plants are based on a single-unit design with fuel handling, storage, and waste removal systems. All units are base-loaded plants capable of meeting current U.S. safety, pollution, and operating regulations.

Accuracy of the capital cost estimates is related to several factors, including site conditions, owner preference, equipment and operational mode, type of construction management, and economic conditions concerning the source and selection of site labor (labor productivity). The cost data in Fig. 1 were normalized to derive a range of costs that would be representative for the industry.

Plant Operating Economics

In a brief study, commercial operating economics were compared for the base-loaded plants mentioned earlier. The information presented in Fig. 2 was established using an existing data base (Ref. 10). Fuel prices used were derived from this source.

The operating and maintenance cost estimates for coal, gas, and nuclear base-loaded electric-generation plants were established using the Oak Ridge National Laboratory's Nuclear Energy Cost Data Base (Ref. 11). These data reflect the significant increases in staffing, training, and inspection requirements for nuclear plants resulting from the Three Mile Island incident. The capacity factor was considered to be identical to the availability factor for base-loaded plants. Individual unit availability factors used for the operating economic evaluations are 80% for natural gas and oil,

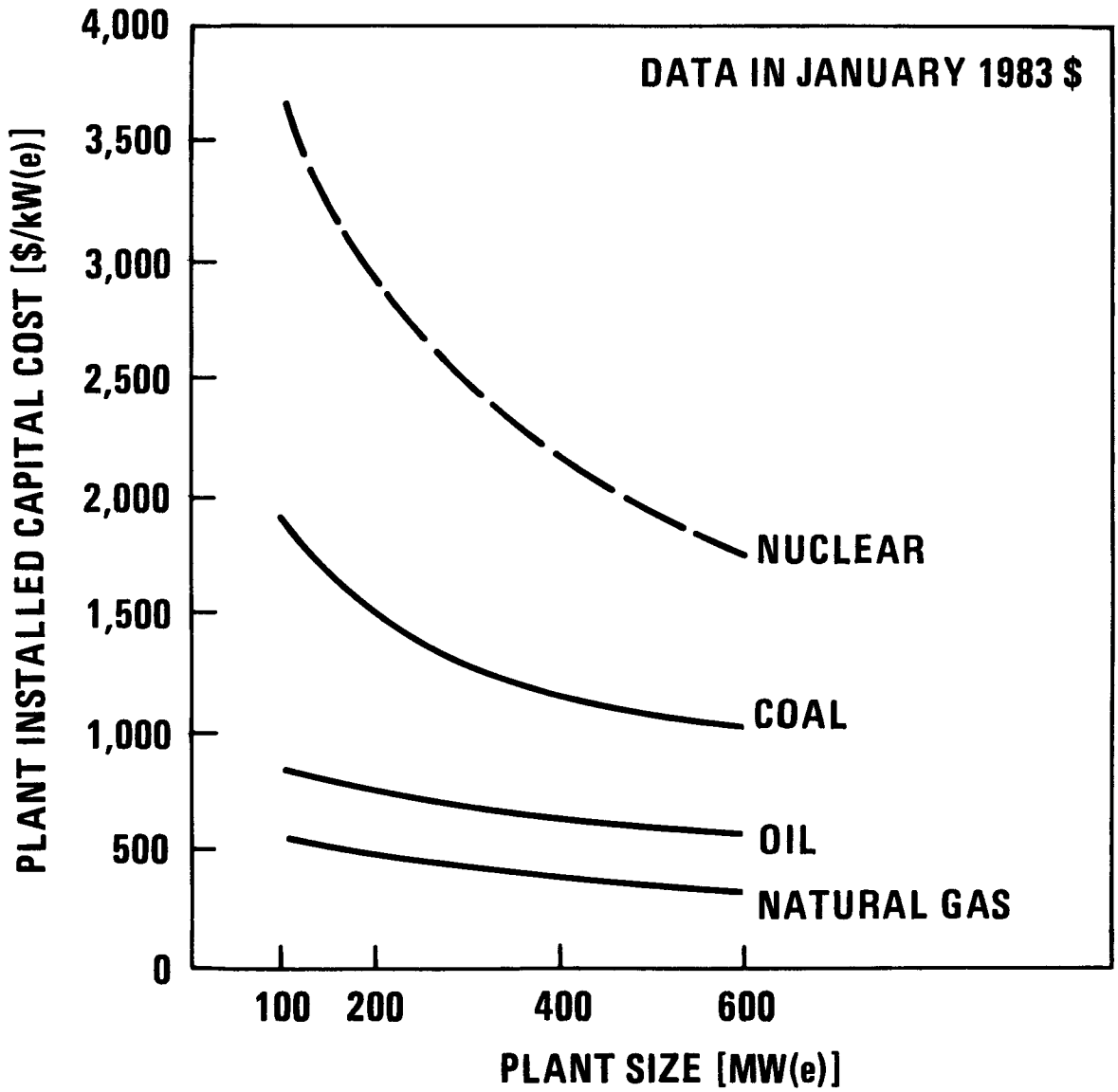

Fig. 1. Typical range of electric power plant specific installed capital costs as a function of plant size

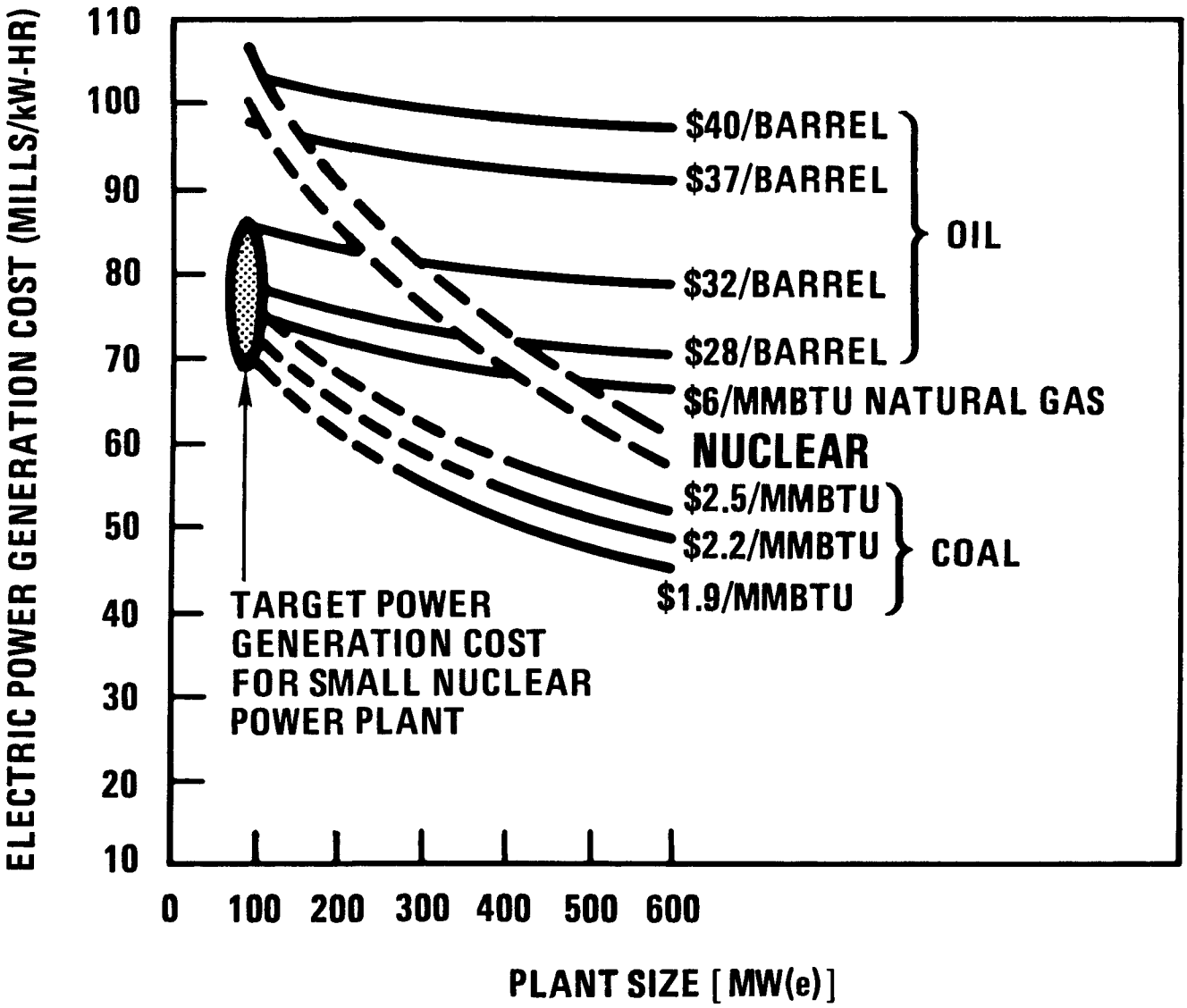

Fig. 2. Typical range of base load power generation costs showing fuel cost sensitivity

80% for <600 MW(t) and 75% for >600 MW(t) coal, and 75% for nuclear. As indicated in Fig. 2, the economics of conventional nuclear plants are not competitive with the fossil alternatives in small sizes.

Economic Challenge for Small Nuclear Plants

It would not be meaningful to establish a small plant concept if its cost were so high as to prohibit introduction into the marketplace. The power generation economics shown in Fig. 2 are, of course, sensitive to the assumptions made, but they have been included in this paper not for the portrayal of absolute cost data, but rather for comparative purposes. They do, however, provide an economic target for the design of the small HTGR that is discussed in the following sections.

SMALL HTGR POWER PLANT CONCEPT

Renewed interest in small reactors is evidenced by work under way in the U.S. (Refs. 12-15), Germany (Refs. 16-19), and Japan (Ref. 20), with emphasis on HTGR concepts. Advantage is being taken of the large technology base for gas-cooled reactors, but to realize the goal of acceptable economics, some new design approaches for a small reactor are necessary. The elements of that approach are:

1. Simplification of the overall system with attendant benefits in reliability and operability.
2. Minimizing the overall project and construction schedule.
3. Standardized designs.
4. Maximum safety through inherent design and the use of passive systems.

Small Steam Cycle HTGR Thermodynamic Cycle

To initiate preconceptual design studies, it was necessary to select an initial set of parameters and system heat balance. A 250-MW(t) reactor

rating was selected for the nuclear steam supply system, and a conventional turbine plant was assumed. A larger rating [up to 300 MW(t)] may be possible. Conservatism was used in the selection of a maximum helium system pressure of 4.14 MPa (600 psia) and a reactor outlet temperature of 688°C (1270°F). Steam is supplied to a conventional steam turbine power conversion system, and the net plant output is 93 MW(e), for an overall efficiency of 37%. The data are considered representative for the purposes of initial small reactor systems- and design-related studies. The basic data are shown for a single module. A DOE-funded program is currently under way to evaluate the approach of clustering a multiplicity of modules at a single site.

Reactor Nuclear Heat Source Layout

A major goal was to design the reactor primary system for passive shutdown cooling of the core when forced cooling was not available. A natural circulation system is proposed for pressurized decay heat removal and radiation cooling for depressurized decay heat removal (to displace the need for auxiliary cooling systems in the event of loss of main cooling systems). The passive system must be capable of cooling the core without damage and, therefore, without hazard to the health and safety of the public.

The major variables facing the primary system designer include (1) reactor vessel type [i.e., prestressed concrete reactor vessel (PCRV), steel], (2) core type (prismatic or pebble bed), (3) number of major components (steam generator, circulator), and (4) component orientation and gas flow path development (bearing in mind the requirement for natural circulation cooling capability). Both the PCRV shown in Fig. 3 and the steel reactor vessel shown in Fig. 4 are being studied. The PCRV, described in Ref. 21, has the advantage of structural integrity as the result of a highly redundant prestressing system of multiple tendons and strands that are not subject to neutron embrittlement and thermal cycling. A potential advantage for the steel vessel is the capability of factory fabrication towards the goal of reducing construction time at the site. The technology base would be the pressure vessels fabricated for light water reactors.

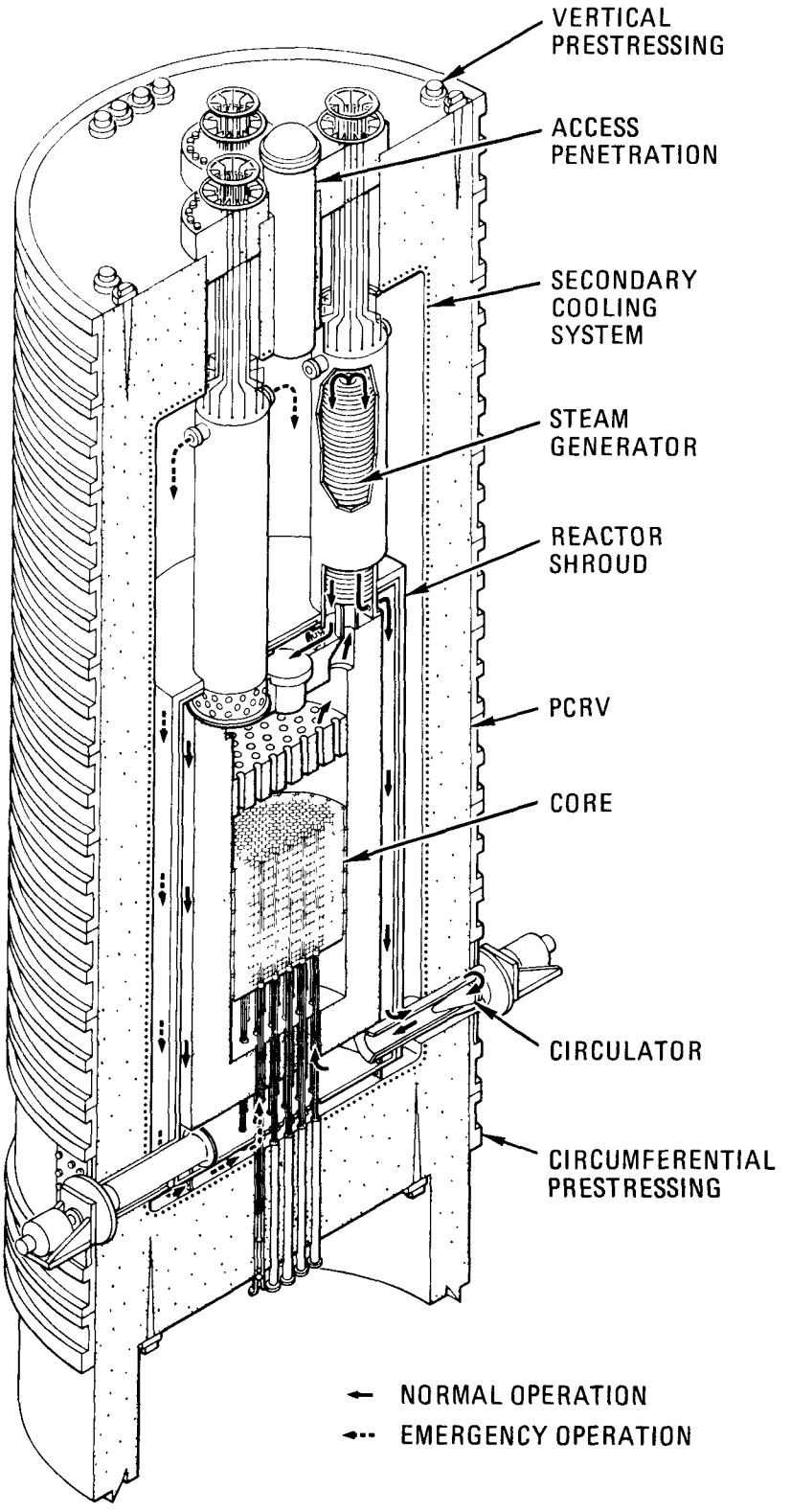

Fig. 3. PCRV design concept for small HTGR steam cycle plant

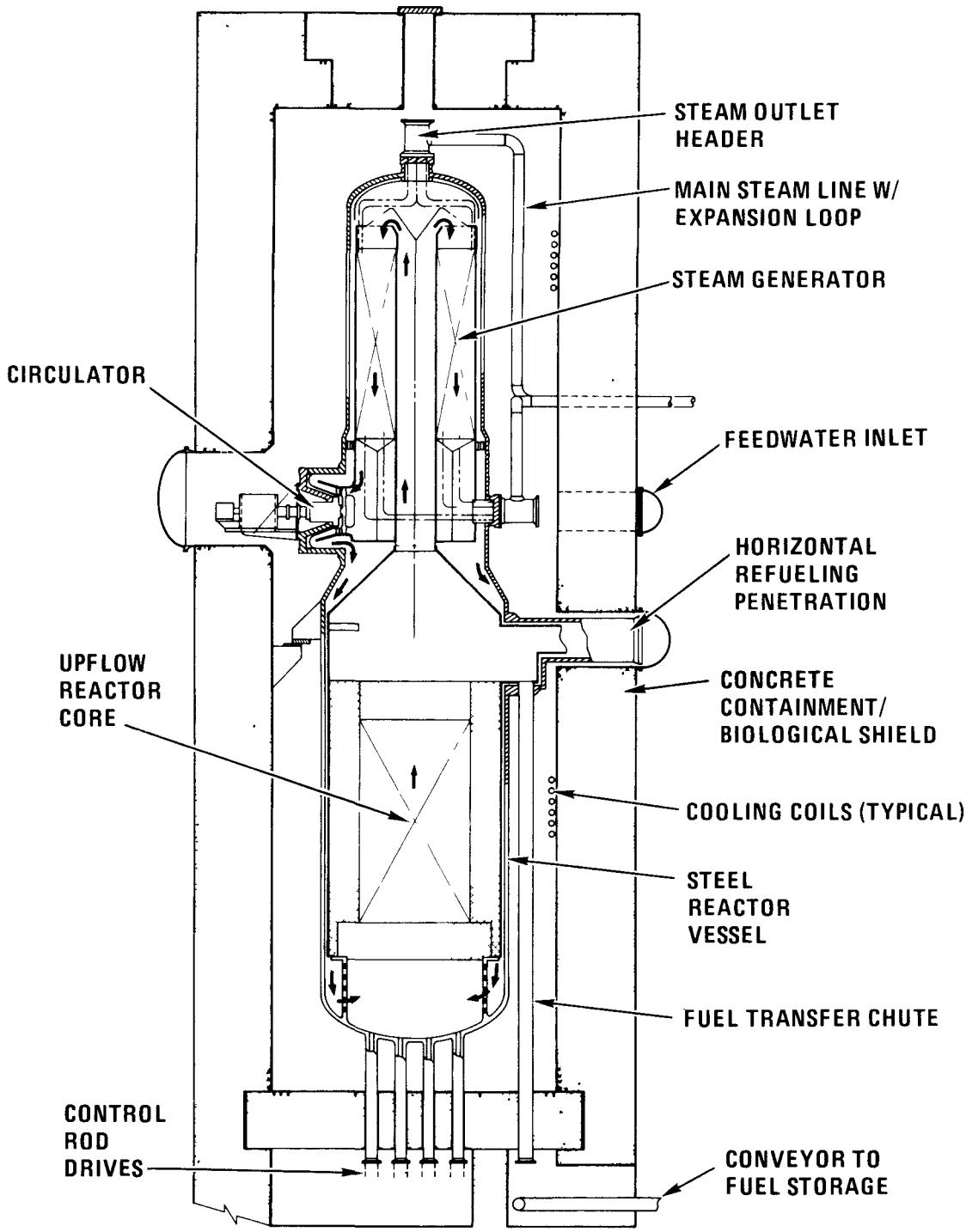

Fig. 4. Small HTGR steam cycle plant concept with steel reactor vessel

With the goal of establishing a simplified plant concept (yet fully meeting the demanding safety, licensing, and performance criteria) conducive to a substantial reduction in construction time (to 4 years) for improved economics, the following tentative decisions were made in the design development of the reactor primary system:

- Prismatic up-flow core.
- Single steam generator and circulator.
- Heat exchanger positioned above the core in an in-line vessel arrangement for enhanced natural circulation cooling capability.
- Bottom control rod penetration.
- Side refueling configuration.

The layout concept, based on the steel reactor vessel, is shown in Fig. 4. The gas flow path shown in the figure is for normal plant operation involving forced circulation of the helium coolant. The cold helium discharged from the circulator at the maximum system pressure flows downward through the annulus between the core and the vessel inner wall. At the vessel bottom, the flow reverses for upward flow through the reactor core, where nuclear-generated heat is absorbed. After exiting the core, the hot helium continues to flow upward through the central hot gas duct to the vessel top, where its direction is again reversed. The helium proceeds downward through the steam generator, where heat is transferred to the steam circuit. Finally, the flow is returned to the circulator, completing the loop. Heat dissipated from the reactor vessel in the normal operation mode is minimal, and water cooling coils positioned on the containment structure ensure that concrete temperature is kept to an acceptable level. Details of the reactor core and major primary system components have been presented previously (Ref. 12). Salient features of the small steam cycle plant are given in Table II.

Based on the primary system concept shown in Fig. 4, a brief study was carried out to identify the main features of the balance of plant. For a

TABLE II
SALIENT FEATURES OF SMALL HTGR STEAM CYCLE PLANT

Rating and Performance	Reactor Thermal Rating, MW(t)	250
	Thermodynamic Cycle	Rankine Steam Cycle Power Conversion System
	Reactor Outlet Temp, °C (°F)	688 (1270)
	Max. System Pressure, MPa (psia)	4.14 (600)
	Heat Losses, MW(t)	5.0
	Net Plant Output, MW(e)	93.0
	Overall Plant Efficiency, %	37.2
Reactor Core	Reactor Core Type	HTGR
	Fuel Element	Prismatic Element
	Helium Flow Configuration	Upflow
	Power Density, W/cm^3	4.1
	Fuel Cycle	LEU/Th
	Refueling Interval and Type	4-Year Batch
	Control Rods	In-Core and Reflector
	Decay Heat Removal	Passive, Natural Circulation System
Plant Design Features	Reactor Vessel Type	PCRV or Steel Reactor Vessel
	Nuclear Heat Source Configuration	In-Line Single Vessel Approach
	Steam Generator Type	Helical Bundle with Upflow Boiling
	Circulator Type	Horizontal Machine, Electric Motor Driven Axial Compressor
	Control Rod Drives	Bottom-Mounted
	Refueling Concept	Side Refueling Arrangement
	Overall Plant Arrangement	Single Module Unit, but Adaptable to a Plant with a Multiplicity of Modules

small HTGR, detailed balance of plant studies are necessary to establish a configuration that would minimize site erection time and hence yield a competitive plant specific cost. A construction schedule of about 4 years is regarded as a realizable goal for a small plant.

REACTOR HEAT REMOVAL SYSTEM

An important feature of the proposed small HTGR concept is that an auxiliary heat removal system (AHRS) is not included. The rationale for this approach is that a reactor core with a small thermal rating [250 MW(t)] and a low power density (4.1 W/cm^3) could satisfy the intent of U.S. NRC General Design Criteria 34 (Residual Heat Removal) and 35 (Emergency Core Cooling) as well as compliance with 10CFR50 by using a passive decay heat removal system. As a part of the initial evaluation of the small reactor system, a passive decay heat removal configuration was investigated.

Main Loop Cooling

For normal power-generating operation, the reactor thermal energy is transferred to the steam generator as shown in Fig. 5(A). For pressurized or depressurized core cooldown, the main loop cooling (MLC) is the first line of defense. When the steam generator and circulator are available, the decay heat is removed by forced circulation of the helium. If the circulator is not operational, induced natural circulation cooling of the core [with heat rejection through the steam generator as shown in Fig. 5(A)] can be realized. Main loop cooling in either the forced or natural circulation mode requires that the steam generator be available, along with coolant flow and an ultimate heat sink. If any of these items is unavailable, the next line of defense is the vessel cooling system.

Vessel Cooling System with Reactor Pressurized

The vessel cooling system (VCS) is used if the MLC is not available. As shown in Fig. 5(B), the VCS consists of redundant (triple system with two active and one passive circuits) cooling coils mounted on the concrete

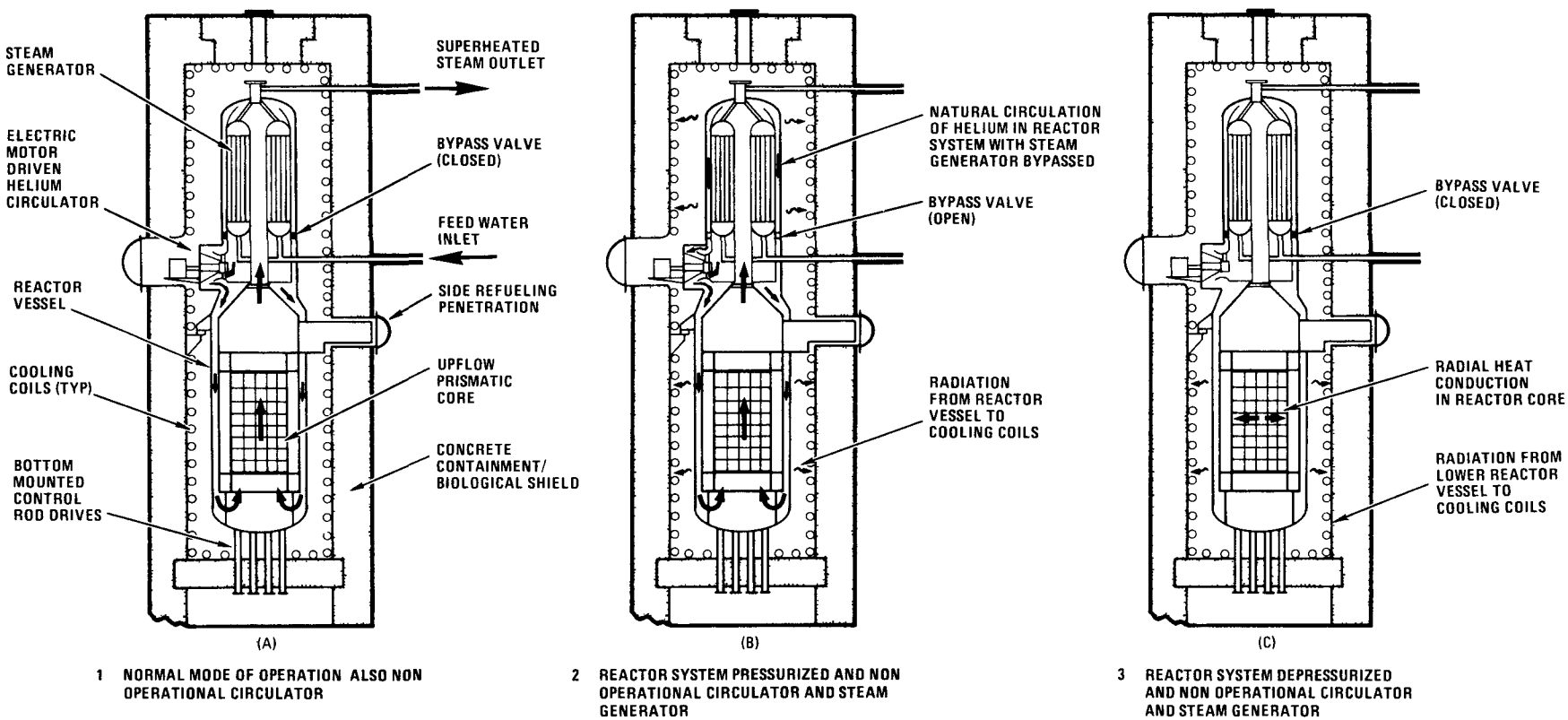

1 NORMAL MODE OF OPERATION ALSO NON OPERATIONAL CIRCULATOR

2 REACTOR SYSTEM PRESSURIZED AND NON OPERATIONAL CIRCULATOR AND STEAM GENERATOR

3 REACTOR SYSTEM DEPRESSURIZED AND NON OPERATIONAL CIRCULATOR AND STEAM GENERATOR

Fig. 5. Modes of heat removal from small HTGR steam cycle plant concept

structure, which also acts as the biological shield. In this mode of operation, the annular bypass valves (between the steam generator shroud and the vessel) open passively, and heat is convectively transferred to the metallic vessel wall and thermally radiated to the cooling coil heat sink on the concrete structure. This cooling of the pressurized helium forms a relatively cool "cold leg" for induced natural circulation cooling of the core; the gas flow path is identified in Fig. 5(B). Preliminary analyses have indicated that for the proposed in-line vessel arrangement, the selected geometries and surface areas, etc., yield thermal-hydraulic conditions that result in vessel temperatures similar to those in a light water reactor plant under normal operating conditions.

Vessel Cooling System with Reactor Depressurized

For depressurized cooldown, natural circulation is not sufficient for decay heat removal. In this mode of operation, heat is removed from the core by radial conduction from the lower vessel wall to the cooling coils on the concrete, as shown in Fig. 5(C). Sufficient thermal analyses were performed to show that the core decay heat can be dissipated from the reactor vessel. A more detailed analysis is required to determine the impact on the major metallic components within the reactor vessel during the passive modes of decay heat removal. The VCS is intended to be designed for both pressurized and "loss of coolant" (depressurized) cooldown so that one system satisfies the intent of both General Design Criteria 34 and 35, as the AHRS does for the large HTGR. Three independent (100% each) cooling loops are provided to satisfy the single-failure criterion. In all of the cooling modes, the ultimate heat sink must be operable under all conditions.

SAFETY CONSIDERATIONS

Although comprehensive studies embodying all aspects of plant safety are necessary, the initial endeavor during the plant preconceptual design stage concentrated on what was projected to be the highest risk contribution, core heatup. Core heatup is defined as an event in which both forced cooling and natural convection cooling are unavailable in the primary

system, causing the graphite core to heat up gradually owing to decay heat generation. Initial studies (Ref. 13) have shown that, even without convective cooling, peak core temperatures during a core heatup are relatively low for the small reactor, and therefore the release of the fuel body fission product inventory is less than 1%. Gradual heatup of the core extends over many days with the active core average temperature reaching only 1260°C (2300°F). This means that much of the active core fuel does not exceed its normal operating temperature. In terms of consequences to the public, the very small releases predicted from an immediate core heatup are negligible. The initial results from the safety study are encouraging, particularly the estimated core heatup frequency of 10^{-6}/plant year, which satisfies the 10^{-4} national goal with considerable margin. Based on these early results, it is anticipated that the small reactor [i.e., 100 MW(e)] can be shown to pose a negligible risk to the surrounding population. This characteristic may be conducive to the siting of a small reactor close to industrial and urban areas.

INVESTMENT RISK PROTECTION

Utility executives and their underwriters have raised the issue of whether other systems that are intrinsically more forgiving than light water reactors can be introduced to restore confidence in the nuclear option. The term "walk-away" is appearing in the energy literature more frequently. This is exemplified by a fossil-fired plant in which, following an accident situation, the combustion system can be shut down and operators can walk away from the plant and leave it unattended without fear of damage to the plant or danger to the public. Residual heat production is one of the chief characteristics of nuclear reactors that hitherto have denied them the walk-away capability of a conventional plant.

The small reactor concept is being designed to handle the decay heat removal by passive means for an unlimited time so that the reactor could be left unattended without fear of fuel damage or significant fission product release, thus posing no hazard to the health and safety of the public. Equally important, a walk-away will not result in permanent damage to the

plant, thus ensuring protection of the owner's investment. An obvious goal would be to establish a plant design with "walk-back" capability. In the unlikely event of core heatup, the plant could be restarted (and return to a revenue bearing mode of operation) without a large cost of plant cleanup and repair.

TECHNOLOGY BASE

Although the small HTGR plant is a new concept, it has a large technology base. Design, construction, and operating experience from HTGR programs in the U.S. and Europe can be utilized. The simplest of the applications, namely the steam cycle plant, has been emphasized in this paper for the following reasons: (1) the DOE-funded HTGR technology program in support of the HTGR Steam Cycle/Cogeneration lead plant would provide a data base, (2) advantage would be taken of experience gained at the Peach Bottom 1 and Fort St. Vrain HTGR plants, and (3) existing light water reactor pressure vessel technology could be utilized.

A particularly germane data base was provided by the 40-MW(e) Peach Bottom 1 HTGR plant, which was operated by Philadelphia Electric Company for a total of 1349 equivalent full-power days between 1967 and 1974 when it was shut down for planned decommissioning. In its over 7-1/2 years of operation, the Peach Bottom 1 reactor was available for service 86% of the time (excluding scheduled shutdowns related to the research and development objectives of the reactor itself). Many of the features of this plant are felt to be directly applicable to the new small HTGR concept outlined in this paper (Ref. 12).

APPLICATIONS FOR SMALL HTGR PLANT CONCEPT

The modular concept is based on establishing a standardized reactor system from the design, construction, licensing, and applications standpoints. The module rating could be chosen to suit small user needs in the approximate range from 10 to 100 MW(e). The upper limit is determined from the following considerations: (1) limiting component size to optimize the

degree of factory fabrication, (2) thermal rating to permit passive heat removal, and (3) insignificant fission product release (<1%) in the unlikely event of a core heatup. For applications above 100 MW(e), a multiplicity of standard modules (up to four) could be considered.

In concert with the current HTGR deployment strategy, the concept outlined here is based on state-of-the-art conditions associated with the steam cycle HTGR. A steam cycle/cogeneration plant would embody the same features in the reactor heat source. Such a plant could provide the total energy needs for an industrial community, an urban area, a military installation, or an island. In the role of an energy complex, the plant could produce a combination of electrical power, process steam, hot water (for district heating), desalination, and hydrogen (e.g., by off-peak electrolysis). The modular reactor is also viewed as being well suited to the more advanced, long-term systems requiring higher temperatures, such as process heat (Ref. 22) and the direct cycle gas turbine (Ref. 23).

SUMMARY

The small nuclear plant concept outlined in this paper is clearly not meant to replace the large nuclear power plants that will continue to be needed by the industrialized nations, but rather recognizes the needs of the smaller energy user, both for special applications in the U.S. and for the developing nations. The small HTGR plant represents only one approach to meet these needs, and its introduction will be very dependent on market forces. The current design has addressed the important factors as viewed technically, economically, and institutionally, and these are summarized in Table III.

It is clear that the key to the economic success of a small reactor lies in altering the traditional scaling laws. The new small HTGR concept may realize this goal by a combination of a standardized nuclear heat source, emphasis on factory fabrication, and system simplicity. Competition from oil, coal, and gas energy sources will be a strong economic factor. In the long term, the real motivation for the introduction of nuclear power

TABLE III
IMPORTANT FACTORS IN DEPLOYMENT OF SMALL HTGR POWER PLANT

Approach to Achieving Economic Goals	• Simplicity of plant design • Emphasis on passive systems • Modular construction • Factory fabrication maximized • Design standardization • Licensing standardization • Construction schedule minimized • Design based on proven technology • Near-term revenue bearing potential • Size flexibility, facilitates capacity growth in small increments
Approach to Achieving Walk-Away Safety	• Small reactor core • Low-power-density core • Passive cooling features • Limited core heatup and safety consequences • Retention of essentially all fission products • Graphite core with high-temperature capability and large heat capacity • Single-phase inert gaseous coolant • Benign safety characteristics • Operational simplicity • "Walk-away" concept goal
Approach to Achieving Investment Protection	• Extremely low probability of core heatup, minimizes investment risk • Minimal investment consequences in rare event of failure • "Walk-back" capability goal (restart capability after core heatup) • Forgiving reactor concept
Applications Flexibility	• Steam cycle plant for power generation • Steam cycle/cogeneration plant for process industries • Process heat plant for synthetic fuel production • Multipurpose energy complex
Technology Status	• State-of-the-art technology • Suited to prismatic or pebble bed core • Limited development for steam cycle or cogeneration plant • Established technology bases - uses to the fullest HTGR and LWR experience • Experience from Peach Bottom 1 and Fort St. Vrain utilized • Study of small modular reactor still in early stage of design development • Significant technical, licensing, safety, and construction issues must be resolved to establish feasibility of concept

plants could be solving the CO_2 problem in the industrialized nations and meeting the power needs of the developing nations, many of whom have no indigenous fossil fuel source. The plant lifetime resource requirements of the various systems are illustrated rather vividly in Fig. 6.

As the title of this paper states, the design of a small plant to satisfy demanding safety and economic factors is a challenge. The plant concept, still in the early stages of design development, needs significant work to investigate and resolve design, licensing, and construction issues (Ref. 12). Studies are under way on the small HTGR system to progress beyond the preconceptual stage outlined in this paper to contribute towards meeting the challenge of future nuclear power generation.

ACKNOWLEDGMENTS

The authors would like to thank the management of GA Technologies for permission to publish this paper. The views expressed here are those of the authors, but they have drawn on HTGR technology supported by the Department of Energy.

REFERENCES

1. "The World List of Nuclear Power Plants," Nuclear News 26, No. 2 (1983).
2. Heising-Goodman, C. D., "Supply of Appropriate Nuclear Technology for the Developing World: Small Power Reactors for Electricity Generation," Applied Energy 8, 19-49 (1981).
3. Roth, E. B., "Nuclear Power for Developing Countries: Attainable Within this Century?," The Energy Journal 3, 65-77 (April 1982).
4. Spiewak, I., et al., "Technical and Economic Studies of Small Reactors for Supply of Electricity and Steam," Oak Ridge National Laboratory Report ORNL/TM-5794, February 1977.
5. Pedersen, T., "Future Market for Small Nuclear Reactors Still Uncertain," Modern Power Systems 3 (Nov. 1982).

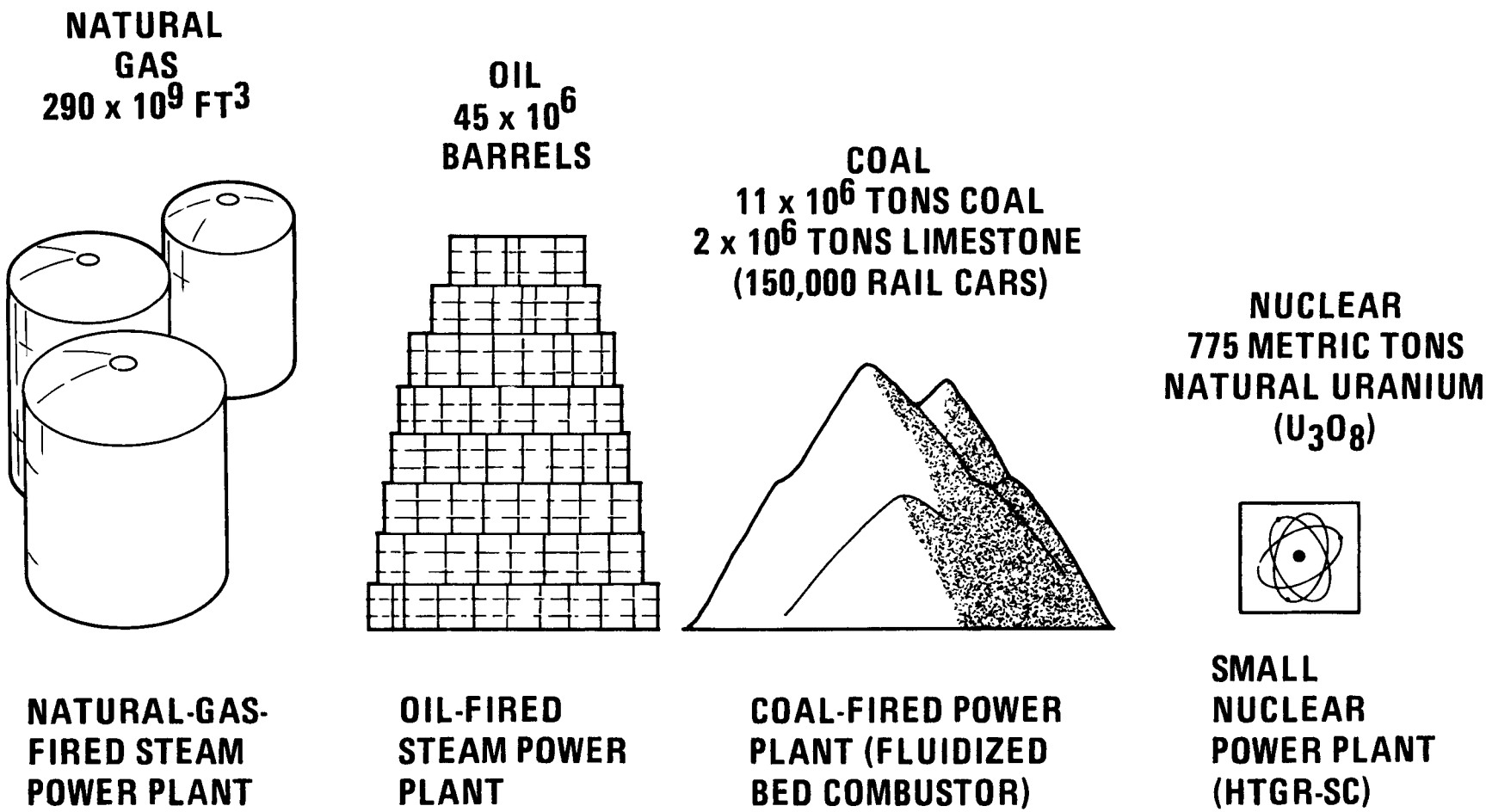

Fig. 6. 100-MW(e) power plant lifetime (40-year) resource requirements (80% capacity assumed)

6. Schmidt, R., "What Prospects for Constructing Small Reactors?," Nuclear Engineering International 27, 49-53 (Oct. 1982).
7. O'Farrelly, C., "Towards a More Forgiving Reactor," IAEA-CH-39/58, 1982.
8. Weinburg, A. M., "Twenty Years Later: A Second Nuclear Era," Nuclear Energy 22, No. 1 (Feb. 1983).
9. Crowley, J. H., and J. D. Griffith, "US Construction Cost Rise Threatens Nuclear Option," Nuclear Engineering International 27, 25-28 (June 1982).
10. "Economic Ground Rules for the HTGR Program for 1983," Gas-Cooled Reactor Associates, January 1983.
11. Myers, M. L., and L. C. Fuller, "A Procedure for Estimating Nonfuel Operation and Maintenance Costs for Large Steam-Electric Power Plants," Oak Ridge National Laboratory Report ORNL/TM-6467, January 1979.
12. McDonald, C. F., and A. J. Goodjohn, "A New Small Modular High-Temperature Gas-Cooled Reactor Plant Concept Based on Proven Technology," Paper 829006, Proceedings IECEC '82, Vol. 1, pp. 26-31.
13. McDonald, C. F., F. A. Silady, and A. S. Shenoy, "A New HTGR Plant Concept with Inherently Safe Features Aimed at Small Energy Users Needs," Paper presented at the Third Japan-U.S. HTGR Safety Technology Seminar, June 2-3, 1982, Upton, New York.
14. Boardman, C. E., and A. J. Lipps, "Reduced Risk HTGR Concept for Industrial Process Heat," Paper presented at the Third Japan-U.S. HTGR Safety Technology Seminar, June 2-3, 1982, Upton, New York.
15. Powell, J. R., et al., "A Small Mass Produced Reactor for Electricity and Process Heat," Paper presented at 5th Miami International Conference on Alternative Energy Sources, Miami Beach, Florida, December 13-15, 1982.
16. Reutler, H., and G. H. Lohnert, "Der Modulare HTR, Ein neueskonzept für den Kugelhaufenreaktor," Atomwirtschaft 27, 18-21 (1982).
17. Baust, E., et al., "Status und Moglichkeiten des Hochtemperaturreaktors," Atomwirtshaft 27, 22-27 (1982).
18. Singh, J., and H. Barnert, "Modular Design Concept for the HTR on the Basis of AVR," Paper presented at BNES Conference, "Gas Cooled Reactors Today," September 20-24, 1982, Bristol, England.

19. Lohnert, G. H., and H. Reutler, "The Modular HTR, A New Design of High Temperature Pebble Bed Reactor," Paper presented at BNES Conference, "Gas Cooled Reactors Today," September 20-24, 1982, Bristol, England.
20. Murota, K., "Status of Development of Small Reactors in Japan," Paper presented at Conference on Nuclear-Electric Power in the Asia-Pacific Region, Honolulu, Hawaii, January 1983.
21. Venkatesh, M. C., and C. F. McDonald, "Prestressed Concrete Reactor Vessel (PCRV) Design Concept Study for Small HTGR Steam Cycle Plant," Paper to be presented at 7th International Conference on Structural Mechanics in Reactor Technology, Chicago, Illinois, August 22-26, 1983.
22. Quade, R. N., and C. F. McDonald, "High Temperature Gas Cooled Reactor for Process Heat Applications," ASME Paper No. 81-WA/NE-13, 1981.
23. McDonald, C. F., and C. O. Peinado, "The Nuclear Gas Turbine--A Perspective on a Long-Term Advanced Technology HTGR Plant Option," ASME Paper No. 82-GT-289, 1982.

DO NOT MICROFILM
COVER

GA Technologies Inc.
P.O. Box 85608, San Diego, California 92138

GA Technologies

GAR-2031
(GA-A17037)
8M 4/83