Progress in Nuclear Energy 51 (2009) 500–525

Contents lists available at ScienceDirect

Progress in Nuclear Energy

journal homepage: www.elsevier.com/locate/pnucene

Nuclear heat for hydrogen production: Coupling a very high/high temperature reactor to a hydrogen production plant

Rachael Elder*, Ray Allen

Department of Chemical and Process Engineering, University of Sheffield, Mappin Street, Sheffield S1 3JD, United Kingdom

Keywords:
Hydrogen
Nuclear hydrogen production
VHTR
Coupling

A B S T R A C T

Hydrogen has been dubbed the fuel of the future. As fossil fuel reserves become depleted and greenhouse gas emissions are reduced inline with the Kyoto protocol, alternative energy sources and vectors, such as hydrogen, must be developed. Hydrogen produced from water splitting, as opposed to from hydrocarbons, has the potential to be a carbon neutral energy solution. There are several methods to extract hydrogen from water, three leading candidates being high temperature electrolysis, the SI thermochemical cycle and the HyS hybrid thermochemical cycle. All three of these processes involve a section requiring very high temperatures. The Very High Temperature Reactor (VHTR), a gas cooled Generation IV reactor, is ideally suited for providing this high temperature heat. Nuclear hydrogen production is being investigated around the world. The four leading consortiums are the Japan Atomic Energy Agency (JAEA), PBMR/Westinghouse, GA, and AREVA NP/CEA/EDF. There are also many smaller R&D efforts focussing on the development of particular materials and components and on process flowsheeting.

A nuclear hydrogen plant involves four key pieces of equipment: the VHTR, the hydrogen production plant (HPP), the intermediate heat exchanger (IHX) and the power conversion system (PCS). The choice of all four items varies dramatically between programmes. Both pebble bed and prismatic fuel block VHTRs are being developed, which can be directly or indirectly coupled to a HPP and PCS placed either in series or parallel. Either a Rankine steam cycle or a Brayton gas turbine cycle can be employed in the PCS. This report details the choices made and research being carried out around the world.

Predicted process efficiencies and plant costs are currently at a preliminary stage and are very similar, regardless of the options chosen. The cost of hydrogen produced from water splitting using nuclear technologies is around \$2/kg H_2. This is competitive with hydrogen produced by other methods, particularly if carbon emissions are regulated and costed. The technological feasibility and testing of key components will be one of the determining factors in plant viability.

© 2008 Elsevier Ltd. All rights reserved.

1. Introduction

Nuclear power will play a significant part in the world's energy supply throughout the next century. Decreasing supplies of fossil fuels, along side increasing instability in their availability, and the need to decrease greenhouse gas emissions in line with the Kyoto protocol, mean the development of alternative energy sources and carriers is extremely important. Renewable forms of energy are not currently developed enough, or available on a large enough scale, to be a significant contributor to the world's energy supply.

1.1. Energy outlook

At the end of last century, the world's consumption of primary energy was 8380 million TOE (tonnes oil equivalent). Research by the European Commission (IAEA, 1999) suggests that this value will rise by 1.6% every year, and it is expected to have doubled by 2050 due to population growth and the industrialisation of developing countries (Crabtree et al., 2004). In 2007, fossil fuels accounted for 80% of the world energy supply and 67% of the world electricity generation (IEA, 2007), despite the fact that they have a finite lifetime and their use produces three quarters of anthropogenic CO_2 emissions (United Kingdom Department of Environment Food and Rural Affairs, 2008). Fossil fuels are distributed unevenly throughout the world, leading to political and security issues. Where possible, fossil fuels should be used as a valuable chemical feedstock and not burned for process heating. The development of alternative energy sources and carriers is essential to ensure a stable energy outlook for future generations.

* Corresponding author. Tel.: +44 114 2227500; fax: +44 114 2227501.
E-mail address: r.elder@sheffield.ac.uk (R. Elder).

0149-1970/\$ – see front matter © 2008 Elsevier Ltd. All rights reserved.
doi:10.1016/j.pnucene.2008.11.001

1.1.1. Climate change

The Intergovernmental Panel on Climate Change (IPCC) stated in a review in early 2007 (IPCC, 2007) that: "Most of the observed increase in globally averaged temperatures since the mid-20th century is very likely due to the observed increase in anthropogenic greenhouse gas concentrations". Greenhouse gases (GHGs), the primary three of which are carbon dioxide, water and methane, absorb solar radiation and so create a natural greenhouse blanket effect around the Earth, without which temperatures would be an estimated 30 °C lower. Carbon dioxide is a long-term greenhouse gas and, once added to the atmosphere, can remain in the atmosphere for hundreds of years. The atmospheric concentrations of all major GHGs have increased significantly since pre-industrial times due to human activities. For example, carbon dioxide concentrations have risen by just over one third from 280 parts per million (ppm) in around 1750, to 379 ppm in 2005. Without intervention, the Stern Review (Stern, 2007) states that CO_2 levels could reach 550 ppm by 2050, leading to warming of at least 2 °C. The outcomes of global warming include the rise of sea levels, glacial retreat, species extinction, an increase in the ranges of infectious diseases and an increased likelihood of severe weather patterns. A temperature rise of just 2.7 °C could lead to the melting of the Greenland ice cap. The broad agreement among climate scientists, that global temperatures will continue to rise, has lead governments and corporations to take actions to curtail global warming. Many mitigation ideas have been suggested, including renewable energies, carbon taxes and offsets, development of new technologies and CO_2 sequestration. After meetings of the World Climate Convention in 1988 and 1992, the Third World Summit resulted in the creation of the Kyoto Protocol, an amendment to the United Nations Framework Convention on Climate Change. Signatory countries agree to cut their GHG emissions by 5.2% compared with 1990 and 1995 levels by the years 2008 and 2012, respectively. Engaging in emissions trading will help some countries achieve the goals. Britain is a leader in the field of climate change, setting ambitious targets and policies, and is one of only a few nations on target to meet their Kyoto commitment (United Kingdom Department of Environment Food and Rural Affairs, 2008). In March 2007 the UK produced a draft Climate Change Bill aimed at moving the UK to a low carbon economy. It aims to cut carbon emissions by 60% by 2050, compared to the 1990 base level. The bill was introduced in Parliament in November 2007 and completed its passage through the House of Lords at the end of March 2008. It will shortly go to the House of Commons for consideration. If approved, the UK will be the first country to have a long range, significant carbon reduction target set into law. Even with a stabilisation or reduction in GHG emissions, anthropogenic warming will continue to rise for centuries due to the timescales associated with climate processes. It is essential that new energy solutions are found which reduce GHG emissions as soon as possible.

1.1.2. Nuclear power

Nuclear power currently accounts for only about 16% of the world's electricity supply, and only just over 6% of the energy supply (IEA, 2007). In Britain, nuclear power accounted for 20% of domestic electricity generation in 2005. These figures are relatively low considering the energy potential and the lack of greenhouse gas emissions. The main drawback of nuclear power is the radioactive waste produced, which, alongside heavily publicised incidents such as Chernobyl, has led to public concern and doubt. Also, nuclear power is currently used almost exclusively to produce electricity, which, without significant research and development, cannot be used on a large scale in the transport sector. Without public, and therefore governmental, support, nuclear power will struggle to find a foothold in future energy supplies. Developing reactor technology, increasing public awareness and acceptance, and developing technologies coupling nuclear power to the transport sector are vital for the future of the nuclear industry.

Table 1
Generation IV reactors identified for development.

Type	Reactor	Acronym	Outlet temperature (°C)
Thermal	Very high temperature reactor	VHTR	>1000
	Supercritical water reactor	SCWR	550
	Molten salt reactor	MSR	700
Fast	Gas cooled fast reactor	GFR	850
	Sodium cooled fast reactor	SFR	550
	Lead cooled fast reactor	LFR	550 up to 800

1.2. Generation IV reactors

Generation IV reactors are a new generation of nuclear reactors designed to broaden the opportunities for nuclear energy. They will be inherently safer than previous generations, highly economical, proliferation resistant and will produce minimal waste. Their development is currently underway around the world and it is predicted that by 2030 the first will be in operation. In the interim, Generation III+ reactors will be built, offering improved economics over the current generation for near term deployment.

In January 2000 the Generation IV International Forum (GIF) was established to investigate innovative nuclear energy system concepts for meeting future energy challenges. The R&D consortium has 11 members. The four main objectives are the following:

1. Advance nuclear safety.
2. Address nuclear non-proliferation and physical protection issues.
3. Competitive economics.
4. Minimise waste and optimise natural resource utilisation.

The objectives are further divided into 8 goals, which are discussed in The Technology Roadmap for Generation IV Nuclear Energy Systems (US DoE and GIF, 2002), published at the end of 2002. Six reactor types are identified for development, as shown in Table 1

1.3. The hydrogen economy

Hydrogen has the potential to solve two major energy challenges: reducing dependence on the decreasing reserves of fossil fuels and reducing pollution and greenhouse gas emissions. Hydrogen is the third most abundant element on the Earth's surface, where it is found primarily in water and organic compounds. Hydrogen is high in energy, yet an engine that burns pure hydrogen produces almost no pollution. Hydrogen is not a primary fuel in the same sense as natural gas, oil and coal, rather, hydrogen is an energy carrier like electricity. The hydrogen economy is the vision of building an energy infrastructure that uses hydrogen as an energy carrier. Hydrogen could be an effective means of storing the energy generated by nuclear power or by intermittent renewable energy sources such as solar power or wind.

There are many conflicting views on the hydrogen economy. The proponents claim that our futures will depend on hydrogen, produced from fossil fuels in the short term and nuclear and renewable sources in the longer term. The critics claim that hydrogen will never compete with electricity from fossil fuels or direct from renewables (Kreith and West, 2004). Accepting that fossil fuels will run out in the not too distant future, and considering environmental concerns, everyone agrees that a new energy

solution is needed in order to provide a stable energy network for future generations. It is doubtful that the electricity grid could cope with the dramatic increase in load that would result from turning to a solely electricity economy, to replace fossil fuels. It is likely, therefore, that in the future hydrogen and electricity will both be used, tailored to suit individual needs. In the near term it may be necessary to produce hydrogen from fossil fuels whilst other technologies develop. Only through continued research and development will a solution to the energy future be found.

1.3.1. Markets for hydrogen

The development of hydrogen technologies involves identifying potential markets and the constraints involved within them. The markets can be split into two main categories (Forsberg, 2007):

- large centralised demands for hydrogen and;
- decentralised demands.

There are currently two main technologies that easily couple to high volume, large scale, centralised hydrogen production: nuclear energy and fossil fuels with carbon dioxide sequestration. The electricity and heat from nuclear plants can be coupled with electrolysis or thermochemical cycles. Hydrogen from the steam reforming of fossil fuels is a proven technology; however, the CO_2 produced must be sequestered if there is to be an environmental benefit. This is not ideal in the long term and the technology still needs further development. There are four main markets for hydrogen: transportation, industrial, electrical and commercial.

1.3.1.1. Transport. The transport sector currently runs almost exclusively on petroleum. Greenhouse gases are not only released during burning in the internal combustion engine of vehicles, but also in the fossil fuel extraction and conversion and the distribution of the petrol. There are two main alternatives to petroleum driven vehicles: battery-electric vehicles (EVs) and fuel cell vehicles (FCVs). A comparison of four hypothetical fuel cycles possible for light vehicles showed that electricity and hydrogen from renewable energy sources are more efficient (on a sun to tank basis) than gasification and liquefaction of biomass (Pro et al., 2005). The comparison also showed that using photovoltaic energy to produce electricity and power an EV was slightly more efficient than using the energy to electrolyse water to form hydrogen and power an FCV. Electrolysis may be the only way to supply sufficient hydrogen for FCVs in the near term. Modelling of the total annual electricity required to sustain hydrogen production for vehicles shows that even with increased efficiency, it will still be necessary to significantly increase electricity generation facilities (Kruger, 2001). EVs are currently ahead of FCVs in delivering practical, on road performance at a reasonable cost (Hammerschlag and Mazza, 2005). The main disadvantage of EVs is the battery life; currently the maximum range is around 360 km per charge before the battery must be recharged for up to 4 h. Hybrid electric vehicles (HEVs), such as the Toyota Prius, operate as an EV for short trips, but also carry liquid fuel making long trips possible. The British Department of Transport concluded that further development of HEVs is the most effective method to reduce GHGs over the next couple of decades (Eyre and Fergusson, 2002). At the present both EVs and FCVs need further development before they compete with petrol vehicles in terms of cost and practicality. Only once this is achieved will they have enough consumer interest to become transport solutions for the future.

In recent years there has been a shift from using hydrogen in FCVs to using it to exploit heavy hydrocarbons, as well as biomass, to make synthetic motor fuels. Major products of hydrocracking are jet fuel, diesel and LPG, which have a low sulphur content. As oil reserves become depleted and we are left to rely on poorer grades of crude oil, such as bituminous shells, residues and oil sands, the use of hydrogen will increase dramatically. Hydrogen is also used in the Fisher Tropsch process to produce a synthetic petroleum substitute from coal. Coal reserves are expected to last significantly longer than oil reserves, indicating that increasing amounts of hydrogen will be used in this process.

1.3.1.2. Industrial. There are many industrial uses for hydrogen. The direct reduction of iron ore and the production of ammonia for fertiliser are two examples where hydrogen is used on a large scale. Ammonia production consumes about half the hydrogen produced today (Forsberg, 2007; IAEA, 1999).

1.3.1.3. Electrical. The demand for electricity varies from day to day and season to season. As a result the price of electricity also varies dramatically. This creates the potential for a hydrogen market that can produce electricity at times of high demand. A hydrogen intermediate and peak electrical system (HIPES) using nuclear hydrogen has been proposed (Forsberg, 2007). It consists of hydrogen production and storage and peak electrical production. Its feasibility is based on the low cost storage of large quantities of hydrogen and the projected costs and efficiencies of fuel cells. The fundamental problem with renewables is matching electricity production to demand. If successful, HIPES could be an enabling technology for a nuclear hydrogen-renewables economy; the ability to store hydrogen for long periods provides a bridging mechanism for many renewable energy sources.

1.3.1.4. Commercial. Commercially, hydrogen will mainly be used to power fuel cells. Fuels cells convert the chemical energy of the fuel fed to them into electricity (Larminie and Dicks, 2003). They differ from batteries in that they do not store the chemical energy, but instead rely on a fuel supply. A fuel cell consists of a negatively charged anode and a positively charged cathode separated by an electrolyte. Commonly, fuel cells are fuelled by hydrogen, hydrocarbons or alcohols. The most common is the proton exchange membrane fuel cell (PEMFC) which uses hydrogen as a fuel, oxygen as the oxidant and a polymer membrane, such as Nafion, as the electrolyte. Hydrogen diffuses to the anode catalyst and dissociates into hydrogen ions (protons) and electrons. The electrons travel round an external circuit, providing electricity. The protons diffuse through the electrolyte, combining with the electrons and oxygen at the cathode to form water. The efficiency of a fuel cell is dependent on the current through it. Currently, fuel cells have efficiencies of up to around 50%.

1.4. Hydrogen production

Hydrogen does not occur in a free state on the Earth and so will have to be manufactured. Even though hydrogen is generally considered to be a clean fuel, it is important to recognise that the method of production plays a very significant role in the level of environmental impact. There are two main sources of hydrogen, fossil fuels and water.

A figure of merit assessment, giving the overall value of different routes to hydrogen (Ewan and Allen, 2005a), shows a clear divide between renewable energy and more traditional fossil fuel based routes. The assessment is based on four factors: the carbon dioxide emissions, the primary energy availability, the land use implications and the hydrogen production cost. Whilst renewable resources have the lowest CO_2 residuals, they also have the highest land use and are the most expensive. Nuclear power, coupled with SMR and capture, or with thermochemical cycles, shows great potential for future large-scale hydrogen production.

1.4.1. Hydrogen from fossil fuels

96% of the hydrogen produced today comes from fossil fuels, with steam reforming of natural gas accounting for a massive 48% (Ewan and Allen, 2005a). Steam, at a temperature of 700–1100 °C, is mixed with methane gas in the presence of a nickel catalyst. There are two competing reactions; in the first methane reacts stoichiometrically with water forming carbon monoxide and hydrogen, whereas in the second an excess of water leads to carbon dioxide and hydrogen formation. Often a 300% excess of steam is used so that more CO_2 is produced, moving the equilibrium in the water–gas shift reaction and so achieving a higher hydrogen yield and avoiding carbon deposition due to the Boudouard reaction which is also catalysed by nickel. If the reforming reaction is carried out in the presence of a CO_2 adsorbent, the reaction temperature is lowered and hydrogen purity increases with the same methane conversion.

Hydrogen can also be formed by the thermal cracking of natural gas, the steam gasification of coal and the oxidation and cracking of heavy oils. The integrated gasification combined cycle (IGCC) integrates the steam–coal gasification process in a combined heat and power facility. It is currently considered the cleanest and one of the most efficient coal fuelled techniques. Biomass gasification and pyrolysis can also be used to generate a fuel gas that can be reformed into hydrogen.

1.4.2. Hydrogen from water

The direct splitting of water to form hydrogen and oxygen requires a very large heat input and a temperature of around 4400 °C. In the Plasma Arc Process water is heated to this high temperature by an electric field, resulting in its cracking (Steinberg and Cheng, 1989). As the process consumes a lot of energy it is very expensive and other water splitting technologies are much more viable. Indirect water splitting technologies, such as thermochemical cycles and electrolysis, operate at lower temperatures and have the potential to produce hydrogen from water on a large scale. These technologies are discussed in the next chapter.

1.4.3. Roadmap for hydrogen production

Assuming that the CO_2 released in the gasification process is released to atmosphere and no cost penalty is paid, in the near term hydrogen from water splitting will be more expensive than hydrogen produced from coal gasification (Engels et al., 1987). Water splitting is therefore a long-term energy conversion process which will come into its own when carbon emissions are regulated or correctly costed. This is highlighted in a coordinated action project recently carried out under the European Union Framework 6 programme: "Innovative Routes for High Temperature Hydrogen Production" (INNOHYP-CA). The state of the art in hydrogen production was evaluated (Ewan et al., 2007), with the most promising processes being divided into three groups that make a consecutive market introduction possible. The first group, for short term pilot demonstration, focuses on the enhancement of current state of the art processes, such as solar steam methane reforming (SMR) and the SOLZINC process. The second group, CO_2 free processes for which further development is needed, but that are likely to be realised by 2020, includes the Hybrid Sulphur and Sulphur Iodine thermochemical cycles and High Temperature Electrolysis. The final groups, which may have benefits in the very long term, are a second generation of CO_2 free processes including the Zn and CuCl thermochemical cycles. A road map of process development and cross cutting actions describing the period up to 2022 was proposed. This report concentrates on the middle group – namely water splitting, CO_2 free processes, with a high temperature step involved.

2. Water splitting to produce hydrogen

In the long term, water is a much more viable source of hydrogen than fossil fuels as no CO_2 is released during processing. Two of the most promising production processes for extracting hydrogen from water are thermochemical cycles and high temperature electrolysis. Both these processes require a high temperature heat source, such as a nuclear or solar reactor. The state of the art of two processes is described in the following sections.

2.1. Thermochemical cycles

Thermochemical water splitting is the conversion of water into hydrogen and oxygen using a series of chemical reactions. All chemical intermediates are recycled internally within the process so that water is the only raw material and hydrogen and oxygen are the only products. The concept of thermochemical production of hydrogen from water was first studied thermodynamically in the 1960s (Funk and Reinstrom, 1966). The decomposition by the use of thermal energy is Carnot limited. At standard temperature and pressure the free energy and enthalpy changes for the direct splitting of water are $\Delta G = 56.7$ kCal/gmol and $\Delta H = 68.3$ kCal/gmol, respectively. It is not until around 4400 °C that the ΔG for the reaction becomes negative (Funk, 2001). At such an extreme temperature there are great problems with materials and separations rendering the direct decomposition infeasible. The work required for the one step process can be reduced by increasing the operating temperature, however, if an upper temperature of 1100 °C is imposed the reduction is modest. In a multi-step process it is, in theory, possible to reduce the work requirement to zero by operating reactions with positive entropy changes at high temperatures and reactions with negative entropy changes at low temperatures. Considering a two-step cycle it is possible to calculate ideal values of ΔH and ΔS in that cycle. Comparing those values with existing chemical products shows that no two-step cycle is possible within a 1100 °C limit (De Beni, 1982). Consequently all possible cycles will have three or more steps. In the 1970s 129 possible thermochemical cycles were published (Bamberger and Richardson, 1976; Bamberger, 1978). The Joint Research Centre at ISPRA investigated 24 cycles in more detail, named Mark X. The third phase of these cycles investigated the sulphur family. The production of H_2SO_4 from SO_2 is possible in several ways, one being reaction with a halogen. The only suitable halogens are bromine and iodine, as fluorine and chlorine introduce a high irreversibility leading to high energy consumption elsewhere in the cycle (Beghi, 1986). The reduction of HBr is an electrochemical step, leading to a hybrid cycle. The sulphur family of cycles was also investigated elsewhere (Weirich et al., 1984).

High temperature processes for hydrogen production are attractive from an efficiency perspective if you consider the second law of thermodynamics, from which is derived $\eta = 1 - (T_C/T_H)$, where T_C and T_H are the cold and hot temperatures, respectively. However, some processes also require an input of electrical or mechanical energy. Electricity is produced with an efficiency η_{el}, so for a required electrical work W_{el}, an amount of heat equal to $Q' = W_{el}/\eta_{el}$ is required. The total energy required by the process is the heat required to produce hydrogen, Q, plus that required for electricity, Q', giving $Q_T = Q + (W_{el}/\eta_{el})$. Normalising these values to the production of one unit of hydrogen allows a global process efficiency to be calculated.

There has been much debate as to whether the higher heating value (HHV) or lower heating value (LHV) of hydrogen should be used in efficiency calculations. The HHV of 286 kJ/mol is the energy gained from burning hydrogen in oxygen at ambient conditions, with the initial and final conditions the same at 1 bar and 25 °C. The

Table 2
Maximum thermodynamic efficiencies for the HyS and SI cycles.

Cycle	η_1	η_2
HyS	0.67	0.67
SI	0.51	0.19

LHV of 236 kJ/mol assumes water is produced at 150 °C, from an initial state of 25 °C, and the energy of vaporisation not recuperated. In this thesis the HHV has been chosen as the basis. The HHV is consistent with the first law of thermodynamics, whereas the LHV is not. Also, using the LHV can lead to efficiencies of greater than 100%, for example in a condensation boiler in the gas industry. The definition of efficiency used is given in equation below.

$$\eta = \frac{\mathrm{HHV}}{Q_{\mathrm{T}}} = \frac{\mathrm{HHV}}{Q + W_{\mathrm{el}}/\eta_{\mathrm{el}}} \quad (1)$$

The efficiency achievable in order for thermochemical cycles to be competitive with other routes to hydrogen is often discussed. The US programme settled on a value of 47% (Brown, 2007), however, no value has been specified in the European programme. All thermochemical cycles currently being investigated around the world still need improvement before this target is reached. The two cycles considered to be the closest to commercialisation are the Sulphur Iodine (SI) cycle and the Hybrid Sulphur (HyS) cycle.

A study of the limiting efficiencies for thermochemical cycles (Ewan and Allen, 2005b) gives a useful basis for comparison of the cycles. The evaluation does not use process flowsheeting and instead is based entirely on thermodynamic considerations. The research uses two modified definitions of efficiency, which reflect the fact that additional measures may be needed to realise the full potential of the cycle. η_1 assumes the additional sources of work are included, whereas without these measures the lower efficiency, η_2, will be the maximum available. Table 2 shows the values of η_1 and η_2 for the HyS and SI cycles.

As well as thermodynamic considerations, the eventual feasibility of a cycle will depend on the ease of separations, the components involved, and the cost of the process. The aim of research into all the cycles is to get as close as possible to the maximum efficiencies shown.

2.1.1. The Sulphur Iodine cycle

The Sulphur Iodine (SI) cycle, or GA process, involves three separate sections, as shown in Fig. 1. The first is the Bunsen section,

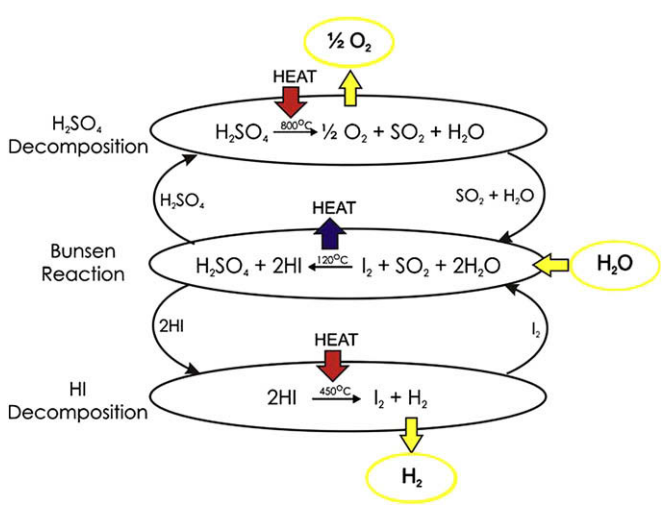

Fig. 1. The Sulphur Iodine cycle.

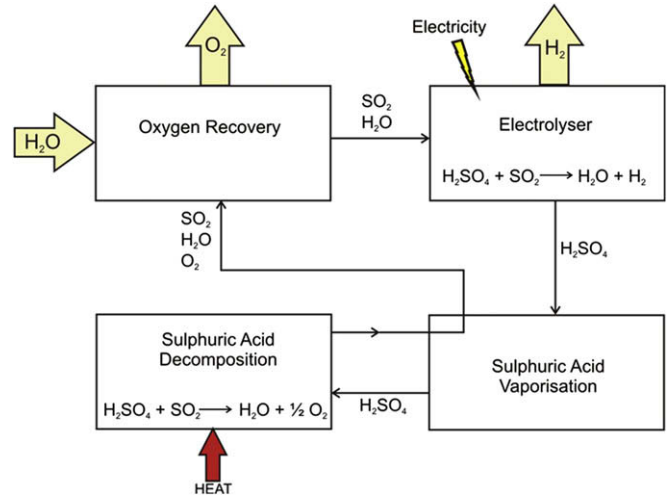

Fig. 2. The Hybrid Sulphur cycle.

where water is reacted with iodine and sulphur dioxide in an exothermic reaction, at around 120 °C, to form sulphuric and hydriodic acids. At certain reactant concentrations, involving an excess of iodine, a phase separation occurs between the two acid products leading to a H_2SO_4 phase principally devoid of HI and vice versa. In the second section, sulphuric acid is decomposed in an endothermic 2-stage reaction first to SO_3 and then to SO_2. The first stage occurs at a temperature of 400–500 °C, whereas the second stage occurs at 800 °C in the presence of a solid catalyst. The third section involves the decomposition of hydriodic acid to form hydrogen and iodine. This is a slightly endothermic reaction and can be conducted in the liquid or gas phase.

The SI cycle was first investigated by General Atomic (GA) in the 1970s, however, energy prices and economics put a stop to ongoing research (Norman et al., 1982). In the late 1990s GA restarted investigating thermochemical cycles, and, finding that the SI cycle had the highest predicted efficiency and the greatest potential for further improvement, they selected it for further research (Mathias and Brown, 2003). It has since been developed in Japan, Korea and Europe as well as the USA. Current predicted efficiencies are in the 35–45% range. The European Union Framework 6 funded HYTHEC (Hydrogen from Thermochemical cycles) project investigated ways to improve the process efficiency (Le Duigou et al., 2007).

Through the US DoE and French-CEA I-NERI (International Nuclear Energy Research Initiative) agreement, an integrated lab scale (ILS) experiment of the SI cycle is being developed (Pickard et al., 2007). The Bunsen section, developed by CEA, and the H_2SO_4 section, developed by Sandia National Laboratory, have both been shipped to GA, where the HI section was developed. Closed loop testing is due to begin this year.

Bench scale experiments of the SI cycle performed at the Japan Atomic Energy Agency (JAEA) demonstrated a stable production of hydrogen and further pilot-scale tests are underway (Kubo et al., 2004a).

2.1.2. The Hybrid Sulphur cycle

The Hybrid Sulphur (HyS) cycle, or Westinghouse cycle, is a combination of electrolysis and thermochemical processes (Brecher et al., 1977), as depicted in Fig. 2. It consists of two main steps, the electrolysis of water and sulphur dioxide at around 87 °C to give hydrogen and sulphuric acid, followed by the decomposition of sulphuric acid first to sulphur trioxide and steam and then further to sulphur dioxide and oxygen. The sulphuric acid decomposition stage is in common with the Sulphur Iodine cycle. It occurs at around 800 °C so a high temperature heat source such as an

advanced nuclear reactor is needed. Having sulphur dioxide present in the electrolyser reduces the required electrode potential for water splitting from a theoretical value of 1.23–0.17 V, therefore reducing the amount of energy required significantly compared to traditional electrolysis. Optimisation of the flowsheet suggested that an efficiency of 47% (LHV, 55% using HHV) is possible using a decomposition temperature and pressure of around 930 °C and 10 bar (Jeong et al., 2005). Another recent flowsheet optimisation estimates the value to be 49.4% (HHV) (Gorensek et al., 2005). The cost of hydrogen production for an Nth of a kind (NOAK) nuclear hydrogen production plant is estimated to be $1.64/kg for a baseline case. There is much scope for further improvements in efficiency by reducing the electrode potential and investigating structural materials stable at the high temperatures involved. The European Union Framework 7 funded HycycleS project, which started in January 2008, will investigate high temperature materials and catalysts as well as the H_2SO_4 decomposition reactor and product separator. At Savannah River National Laboratory, a single cell electrolyser has been built and operated for 100 h (Summers et al., 2007). Testing of a multi-cell electrolyser is planned for this year. Westinghouse are also investigating the electrolyser and decomposition reactor (McLaughlin et al., 2005).

2.1.3. Other multi-stage thermochemical cycles

2.1.3.1. The UT-3 cycle. The UT-3 cycle, developed at the University of Tokyo, consists of four reactions involving metallic bromides (Kameyama and Yoshida, 1978). The hydrolysis and bromination of Ca and Fe compounds are carried out in the gas–solid state. Much work was carried out on the cycle in the 80s and early 90s, leading to an adiabatic form of the cycle being developed which simulations showed had a higher efficiency than previous versions. The combination of a HTGR (high temperature gas cooled reactor), the UT-3 cycle, and an electric power generating system was suggested to have an efficiency of around 49% (Sakurai et al., 1996). Further work showed that using a membrane gas separator was beneficial to both the process efficiency and economics (Tadokoro et al., 1997) and the Model Apparatus for the Study of Cyclic Operation in Tokyo (MASCOT) pilot plant was operated in the late 80s. However, more recent work has shown that these efficiencies were gross over estimates due to some of the assumptions made (Teo et al., 2005). The upper bound efficiency was shown to be 37.3% (LHV), equivalent to 44.3% (HHV). Taking into account other process uncertainties, the efficiency was predicted to be only 13%, much too low to be economic.

The physiochemical properties of the solid and gaseous reactants, for example the sintering of the solid, along with the toxicity of the reactants, make the practicalities of the process very difficult (Lemort et al., 2006). A new flowsheet was developed which employed two asymmetric torus reactors with fluidised beds of solid reactants in each leg. This has the advantage of avoiding the energy intensive reactant preparation step and also improves the reaction kinetics. Using membrane separation techniques on the gas streams, the efficiency was predicted to be 22.5%. Advances in both membrane and process technology need to be made in order for the process to be a viable route to hydrogen production.

2.1.3.2. The hybrid copper chloride cycle. The hybrid copper chloride cycle is being developed at Argonne National Laboratory in the USA (Lewis and Masin, 2005). It has the advantage that the highest temperature step operates at only 550 °C, some 300 °C lower than the HyS and SI cycles. The cycle comprises three thermal reactions, in which hydrogen, oxygen and HCl are generated, and an electrochemical step in which CuCl forms $CuCl_2$ and metallic Cu. The idealized efficiency is estimated to be 42% (LHV, about 49% using HHV), however, there are significant gaps in the thermodynamic knowledge and on the optimum operation of the HCl and O_2 generation reactions, and significant development work is required.

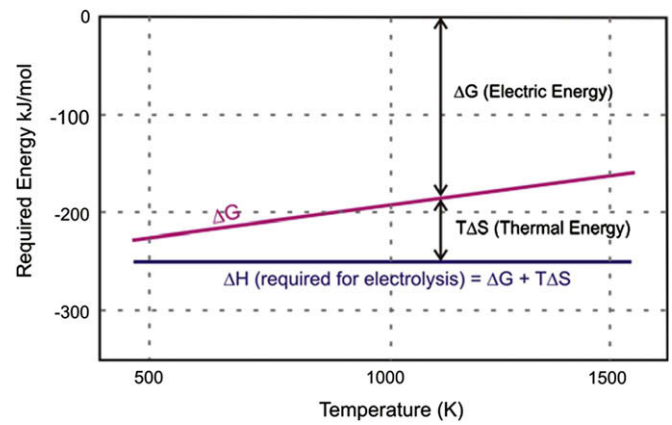

Fig. 3. The thermodynamics of high temperature electrolysis.

2.1.4. Two-step thermochemical cycles

If an upper temperature limit is not applied to cycle selection, the chemical constraints for chemical compounds to form via two-step cycles are less stringent. The higher temperatures required could feasibly be supplied by solar power, however, are not currently possible using nuclear technology. Metal oxide processes involving a metal oxide redox pair show promise for two-step cycle operation. Thermodynamic analysis of possible redox pairs indicated that Fe_3O4/FeO and ZnO/Zn have the greatest potential for two-step water splitting. Other pairs, such as Mn_3O_4/MnO and Co_3O_4/CoO, are not thermodynamically able to produce hydrogen in significant quantities over a wide temperature range (Kodama and Gokon, 2007).

2.2. High temperature electrolysis

Around 4% of the world's hydrogen is currently produced by conventional, low temperature, water electrolysis. An electric current is passed through the water causing it to dissociate into hydrogen and oxygen. Researchers have been investigating using solar energy and wind to power a conventional electrolyser to produce hydrogen (Glatzmaier and Blake, 1998). The efficiency of converting electricity to hydrogen in an electrolyser is as high as 80%, however, the efficiency of converting heat to electricity is less than 40%, yielding an overall efficiency of less than 35%. High temperature electrolysis of steam, at 800–1000 °C, has several advantages over the low temperature alternative; the thermodynamic electric energy required is reduced, as shown in Fig. 3, and the activation barrier at the electrolyte surfaces is easier to overcome, resulting in an improved efficiency. However, significant problems exist in constructing stacks that have long lifetimes for the sophisticated catalysts required.

High temperature electrolysis (HTE) is based on the technology of solid oxide fuel cells (SOFCs), which have been the subject of much R&D over the last 20 years. Whereas SOFCs consume hydrogen and oxygen to produce heat and electricity, solid oxide electrolytic cells (SOECs) consume electricity and steam and produce hydrogen and oxygen. The mechanism of HTE is shown in Fig. 4. Before entering the electrolysis cell, water is heated to form steam. The steam is supplied to the cathode side, where the application of a voltage breaks it down to give product hydrogen and oxygen ions. The oxygen ions migrate through the electrolyte to the anode where they give up electrons to form product oxygen. The voltage required is about 0.3 V lower than in conventional

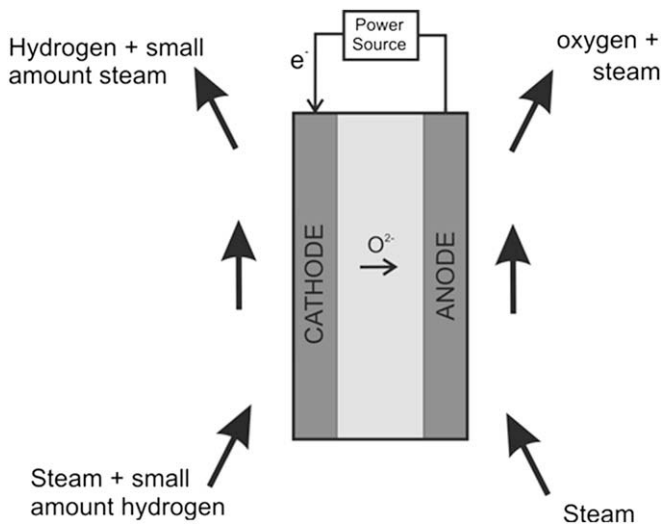

Fig. 4. High temperature electrolysis.

electrolysers due to the high operating temperature. In addition the kinetics are faster than at room temperature and so polarisation losses are avoided.

HTE is being developed in both the USA and Japan. Idaho National Laboratory (INL) and Ceramatec have a partnership developing the electrolyser (Herring et al., 2007a). Initial experiments were carried out using a button cell, the results being then used to create the first planar 10-cell stack. Hydrogen production rates up to 90 NL/h were demonstrated (Herring et al., 2007b). A dual stack was then created which produced hydrogen at rates in excess of 200 NL/h (O'Brien et al., 2007b). The stack was operated for over 2000 h and experienced a ~45% degradation in performance (Herring et al., 2007a). Post test evaluation of the cells is being carried out to investigate causes of degradation (Mawdsley et al., 2007). The dual stack represents a half module of the Integrated lab scale (ILS) experiment, which produced its first hydrogen at the end of September 2007. Large-scale tests will be carried out using this apparatus over the next year. CFD modelling using FLUENT is being used to determine the best ways to reduce thermal stresses over the area of the cells and to assure good steam distribution (Hawkes et al., 2007). During the half module test, the stack was also operated in a co-electrolysis mode (called syntrolysis), where steam and carbon dioxide are supplied to the stack and a mixture of carbon monoxide and hydrogen called syn gas is produced. This can be used as a feed in the Fisher Tropsch process to produce synthetic fuels. The results were very promising and overall efficiencies of 43–48% were predicted (Stoots et al., 2007; O'Brien et al., 2007a).

Modelling work in Japan suggests that, when coupled to a HTGR, hydrogen production efficiencies of over 53% are accomplishable (Fujiwara et al., 2008). A unit of 15 tubular cells was constructed and achieved a hydrogen production rate of 130 NL/h. Good agreement was seen between cell performance and simulations prediction using the CFD code STAR-CD. The development of several further cells is currently underway.

2.3. High temperature heat sources

A key feature of high temperature electrolysis, and of many thermochemical cycles, is that they all have a stage requiring very high temperatures. In fact, HTE, and the HyS and SI cycles all require temperatures in excess of 800 °C. It is important to obtain the heat from a source that does not contribute to emissions causing the greenhouse effect, otherwise the advantages gained by the clean technology are negated by the power source. There are two main contenders: nuclear power and solar energy.

Table 3
Comparison of thermal-to-hydrogen technologies (Yildiz and Kazimi, 2006).

Process	Nuclear reactor	Operating range			
		Minimum		Maximum	
		Temp (°C)	Efficiency	Temp (°C)	Efficiency
HTE	AGR + S CO_2	650	0.52	750	0.56
HTE	MHR + GT	850	0.50	950	0.53
HyS	MHR	800	0.53	900	0.57
SI	MHR	800	0.38	900	0.52

As technology improves, lower temperature cycles may become more attractive, therefore opening the door to other heat sources.

2.3.1. Solar

Concentrated solar radiation can be used as a high temperature energy source for endothermic reactions in thermochemical cycles. The large-scale concentration of solar energy is achievable using three different optical configurations of parabolic reflectors: trough, tower and dish systems (Steinfeld, 2005). Using these systems the solar energy can be converted to thermal reservoirs at 1700 °C. The high achievable temperatures mean that solar energy could be used to power the efficient 2-step thermochemical cycles using metal oxides, such as the ZnO/Zn cycle (Kodama and Gokon, 2007). The application of solar energy to a thermochemical cycle of mixed iron oxides has been investigated (Roeb et al., 2006). The iron oxides are coated on multi-channelled honeycomb ceramic supports which are capable of absorbing solar irradiation. This allows the whole process to take place in a single receiver-reactor. In the Sulphur Iodine cycle, both the extent and rate of H_2SO_4 decomposition are improved at the very high temperatures achievable with solar energy.

The application of a combined energy supply of solar and fossil fuels would enable the Sulphur Iodine process to operate continuously (Giaconia et al., 2007b). A solar concentrator plant supplies a thermal load at medium temperatures (<550°C) and a methane furnace provides the heat required by the high temperature sulphuric acid decomposition section. An additional section is added to the flowsheet which combines the CO_2 released with a fraction of the hydrogen produced to form methanol.

High temperature electrolysis requires significant amounts of electricity as well as high temperature heat. It is therefore less suited to coupling with a solar reactor.

The main disadvantage of solar energy is its varied concentration across the world. In Britain, where the sun index is low, there is not enough solar capacity for large-scale hydrogen production. The high temperature heat must therefore be provided by nuclear energy.

2.3.2. Nuclear

Coupling high temperature electrolysis or a thermochemical cycle to a high temperature nuclear reactor will provide the heat required without producing greenhouse gas emissions. Generation IV reactors are ideal for coupling to a hydrogen production plant (HPP) due to their inherent safety and very high temperatures. Referring back to Table 1, the VHTR and GFR both reach temperatures of over 800 °C, high enough for use with the SI or HyS cycles.

An interesting comparison of thermal-to-hydrogen efficiency of HTE, SI and HyS related technologies has been carried out and is summarised in Table 3 (Yildiz and Kazimi, 2006).

The Modular Helium Reactor (MHR) is a type of VHTR, as explained in the next chapter. The first HTE option, which shows high efficiencies, operates at a lower temperature than the others

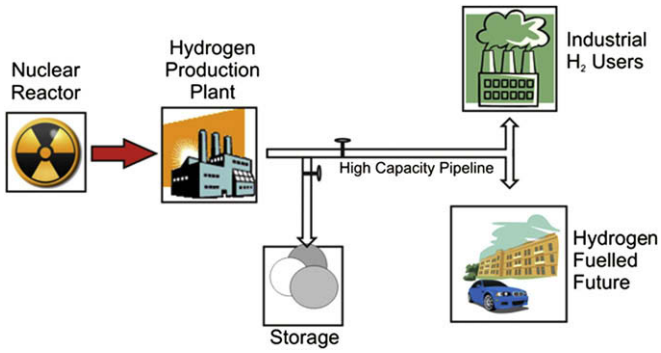

Fig. 5. Schematic of nuclear hydrogen future (US DoE NERI, 2006).

and uses an Advanced Gas Reactor (AGR). There are 14 AGRs in operation in the UK. The efficiencies described in the table below assume coupling with a supercritical CO_2 recompression Brayton cycle (see Section 3.2), however, no such systems have currently been built. The second HTE option, which operates at higher temperature, utilises a helium gas turbine system. At the lower end of the temperature range for a VHTR, the HyS cycle shows significantly higher efficiencies than the SI cycle. However, as the temperature increases the efficiency of the SI cycle improves greatly. The efficiencies given highlight the importance of the temperature achievable by the nuclear reactor and the coupling method used. Much work is being carried out around the world to investigate both of these.

A generalised schematic of a "nuclear hydrogen future" is given in Fig. 5. Hydrogen is produced in a centralised production facility, stored temporarily if necessary, and distributed to the end users. A study by a US team, funded by the DOE Nuclear Energy Research Initiative (NERI), considered the economics and infrastructure of a generic Nth of a kind (NOAK) commercial nuclear hydrogen plant (U.S. Department of Energy Office of Nuclear Energy Science and Technology Nuclear Energy Research Initiative (NERI), 2006). They concluded that "…nuclear hydrogen production is a technically feasible and economically viable option for addressing future national energy needs". No significant technical or economic barriers were identified. Further results from the study will be presented later in this report.

There are four distinct areas of a nuclear hydrogen production plant: the nuclear reactor, the hydrogen production plant, the power conversion system and the intermediate heat exchange loop. These will be discussed in the following chapters.

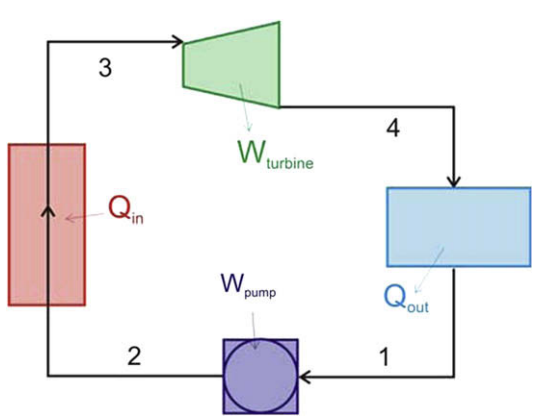

Fig. 6. Rankine cycle.

3. Power conversion systems

There are two main types of power generation system used to convert heat into work: the Rankine cycle and the Brayton cycle. Both cycles are outlined below. The choice of which is coupled to the nuclear reactor depends on several factors, and different companies have made different selections. The choice of cycle can also differ depending on whether the nuclear plant is for solely electricity production, both electricity and hydrogen production, or solely hydrogen production. This chapter presents the science behind each cycle, and individual choices are covered in chapter 4 alongside their corresponding reactor configurations.

3.1. Rankine cycle

Almost all existing coal and nuclear power stations use the Rankine cycle for electricity generations. Heat is applied externally to a closed loop, usually of water, as shown in Fig. 6. The heated water passes through a turbine, and is then condensed and pumped back to the heat exchanger. High efficiencies are achieved as the water is liquid when pumped, which requires about 100 times less energy than compressing a gas. The actual efficiency depends on the temperatures employed. Typically the turbine inlet temperature is about 565 °C, the creep limit of stainless steel, and the condenser temperature is around 30 °C. As the turbine entry temperature is relatively low, the Rankine cycle is often used as a bottoming cycle in combined cycle gas turbine power stations.

The Rankine cycle is also sometimes referred to as a practical Carnot cycle, as the *T–S* diagram resembles that of a Carnot cycle if an efficient turbine is used. For a Carnot cycle, the lines on the *T–S* diagram would be either horizontal or vertical, however, in order to achieve acceptable efficiencies in the Rankine cycle, the fluid pumped must be all liquid. There are four processes in a Rankine cycle, as seen in Fig. 6 and identified on the *T–S* diagram in Fig. 7a (Sandler, 1999).

- 1–2, purple: the liquid is pumped from low to high pressure.
- 2–3, red: the high pressure liquid enters the heat exchanger, where it is heated to become a dry, saturated vapour.
- 3–4, green: the vapour expands through a turbine, decreasing the temperature and pressure and generating power. Some condensation may occur.
- 4–1, blue: the fluid is condensed at constant temperature and pressure.

In an ideal process both the pump and turbine would be isentropic and therefore maximise the work output. In reality, however, these processes are non-reversible and entropy is increased. The efficiency of the turbine is limited by water droplet formation; as the water condenses, droplets hit the turbine blades at high speed causing erosion which gradually decreases the turbine efficiency. The simplest way to overcome this is by superheating the steam, as shown by points 3′ and 4′ in Fig. 7b. This creates a dryer steam after expansion, however, it also increases the condenser load.

There are two common modifications used to improve the efficiency of the standard Rankine cycle. Fig. 8 shows the Rankine cycle with reheat, in which two turbines are used in series. High pressure steam from the boiler passes through the first turbine and then goes back to the boiler to be reheated. It then goes through the second turbine which operates at a lower pressure. This both improves the efficiency and prevents vapour condensation on the turbine blades.

Fig. 9 shows the regenerative Rankine cycle. A regenerator, or open feedwater heater, is used as a mixing chamber. The feedwater is the water leaving the pump (state 2), which is mixed with a portion of the high temperature steam leaving the turbine (state

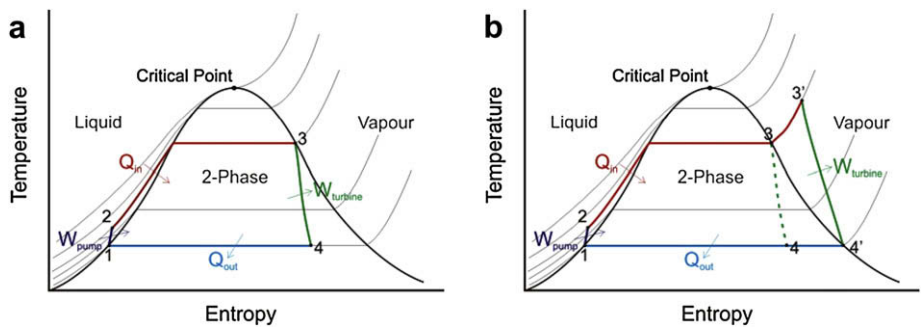

Fig. 7. *T–S* diagram of (a) a typical Rankine cycle and (b) a Rankine cycle with superheating.

4), to form a saturated liquid (state 7). The regenerator is shown by the orange lines in Fig. 9. A second pump is then used to increase the temperature and pressure before the liquid goes to the boiler. This regenerative Rankine cycle is commonly used in modern power stations.

3.2. Brayton cycle

The coupling of a Brayton cycle to a nuclear power plant has yet to be demonstrated, however, the technology is used in other areas. The Brayton cycle, also known as the gas turbine, differs from the Rankine cycle in that the fluid is vapour in the entire cycle (Sandler, 1999). For coupling to a high temperature nuclear reactor, helium is the most common working fluid. In a simple Brayton cycle, a turbine and compressor are mounted on the same shaft, as shown in Fig. 10. The gas is first heated, then the turbine extracts work from the high temperature and pressure gas before it is cooled and passed through the compressor.

In the same way as for the Rankine cycle, the power and efficiency of the Brayton cycle can be increased by using different, more complicated configurations. Reheating can be used to increase the power of the cycle. After passing through the turbine, the gas is reheated before going through a second turbine. Intercooling utilises two stages of compressors, with an additional cooler in between them. This decreases the overall energy required by the compression stages, however, does utilise more energy from the heat source. Reheating and intercooling are both examples of multi-staging, where more than one turbine and/or compressor are used. Regeneration, or recuperation, improves the efficiency by utilising waste heat. The hot gas leaving the turbine passes through a heat exchanger to preheat the fluid re-entering the heat source. A thermodynamic evaluation showed that regenerative reheating significantly enhances the thermal performance of a reference Brayton cycle (Herranz et al., 2007). Fig. 11 shows an ideal Brayton cycle with reheating, regeneration and intercooling. The maximum efficiency is attained when equal pressure ratios are maintained across each compressor and each turbine stage. The main advantage of multi-staging is that the high efficiencies associated with low pressure ratio regenerative cycles can be achieved without the very large regenerator required for a single-stage cycle with the same power output. Thermodynamic analysis shows that the high efficiencies obtained by using two compressors are not significantly improved if more compression stages are used (Herranz et al., 2006). The cycle shown in Fig. 11 is ideal – the turbines and compressors are isentropic and the heaters and coolers are isobaric. In practice, there are pressure losses in the ducts between components and across the heat exchangers. This reduces the efficiency as the pressure drop across the turbine is decreased. On the *T–S* diagram the lines for the turbines and compressors would not be vertical and the lines for the heaters and coolers would jump between nearby isobars.

The turbine and compressor stages can be on a single shaft or several shafts, which can be mounted either horizontally or vertically. Horizontal mounting minimises the load on the bearings, however, it has a larger footprint.

The Brayton cycle can be operated either directly or indirectly coupled to the nuclear reactor. Direct coupling has the advantage of simplicity, the use of only one hot helium loop and no need for an intermediate heat exchanger. Indirect coupling, however, presents less safety issues and allows more flexibility.

Research is also being carried out investigating operating a Brayton cycle with supercritical CO_2 as the working fluid. The main advantage is comparable efficiency to the helium Brayton cycle but at significantly lower temperatures (Dostal et al., 2004). In fact, the temperature required for comparable efficiency is only 550 °C, at a pressure of 20 MPa, making it compatible with many different nuclear reactor types. The high efficiency is achieved by taking advantage of the abrupt property changes near the critical

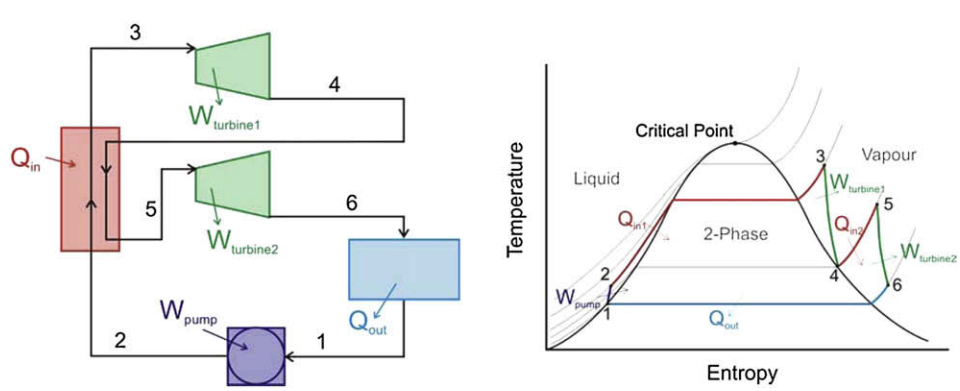

Fig. 8. Rankine cycle with reheat.

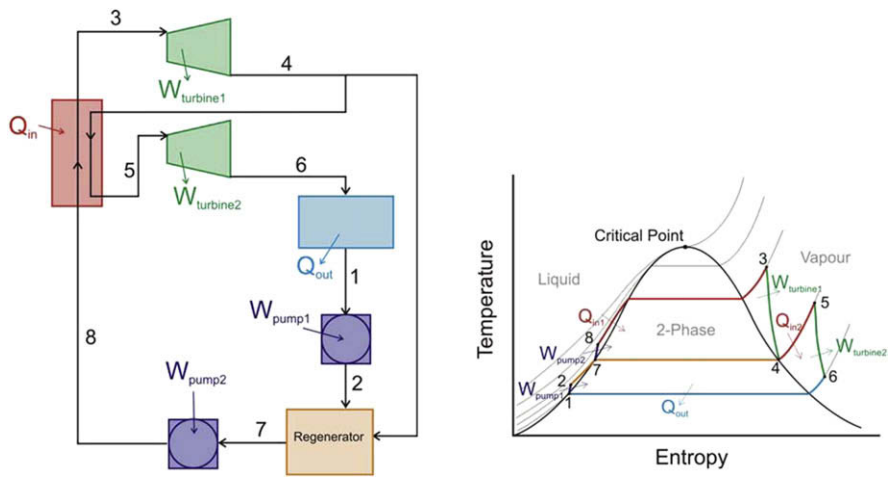

Fig. 9. Regenerative Rankine cycle.

point of CO_2 and so reducing the compression work. Recent advances in turbo machinery have made it possible for the first time to affordably evaluate and experimentally demonstrate the technology required and Sandia National Labs have set up a test loop to do a series of experiments on an appropriate scale. Two papers will be presented on this work later in the year (Wright et al., 2008a,b).

3.3. Combined cycles

As the Brayton cycle operates at high temperatures and pressures it is ideal for combining with a Rankine cycle. In such a combined cycle, a topping Brayton cycle and bottoming Rankine cycle are used, as shown in Fig. 12. This has the advantage of high process efficiencies, however, has not yet been demonstrated in combination with nuclear technology.

3.4. Comparison of power conversion systems

The influence of the type of cycle, coupling method, steam parameters, reheating and intercooling (IC) has been investigated thermodynamically (Frohling et al., 2002). The results of the study, based on a 200 MWt reactor, are shown in Fig. 13. The efficiencies shown are first-order approximations, and whilst they demonstrate the trends a more detailed study is required as well as a cost analysis. There is significant potential for increasing the efficiency by increasing the reactor core and steam temperatures. Improving the efficiencies of the turbo-machinery and pumps would also have a significant effect. The cycles are arranged into three groups, according to the degree of complexity and proof of technology. Group A shows the lowest efficiencies, however, are only moderately complex and involve predominately proven technology. In contrast, group C shows the highest efficiencies, but are highly complex and not nuclear-proven technology.

The majority of research centres have chosen to use either proven Rankine cycle technology at the expense of high efficiency, or to use the as yet unproven Brayton cycle which gives higher efficiencies. Clearly, as technology develops, higher efficiencies are achievable, particularly if a combined cycle is employed. The cycles chosen by individual centres are discussed in the following chapter.

4. Nuclear technologies for hydrogen production

Nuclear heat has great potential for coupling to a hydrogen production plant (HPP) utilising HTE, the HyS cycle or the SI cycle. Referring back to Table 1, there are two types of nuclear technology which can achieve the high temperatures required: the VHTR and the GFR. A great deal of research is being carried out around the world on VHTRs, whereas the GFR has received less interest to date. The VHTR is a high temperature gas cooled reactor (HTGR) which operates at outlet temperatures of 750 °C and higher.

4.1. The high temperature gas cooled reactor (HTGR)

HTGR technology has been developing over the last 50 years and so far seven plants have been designed, constructed and operated. The HTGR concept evolved from early air and CO_2 cooled reactors (LaBar et al., 2004). The use of helium as a coolant, along with

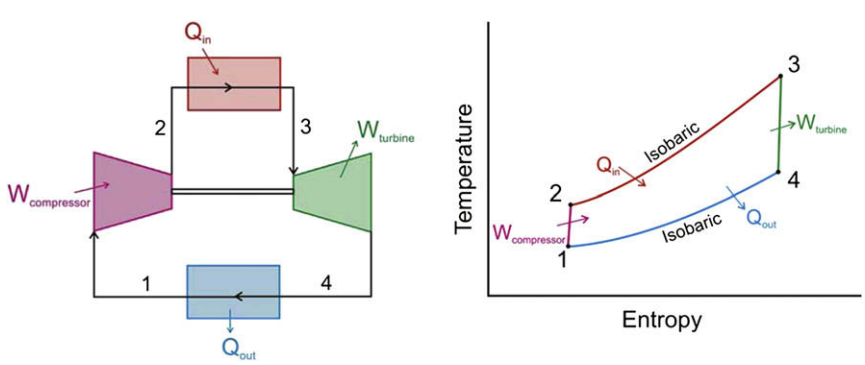

Fig. 10. A simple Brayton cycle.

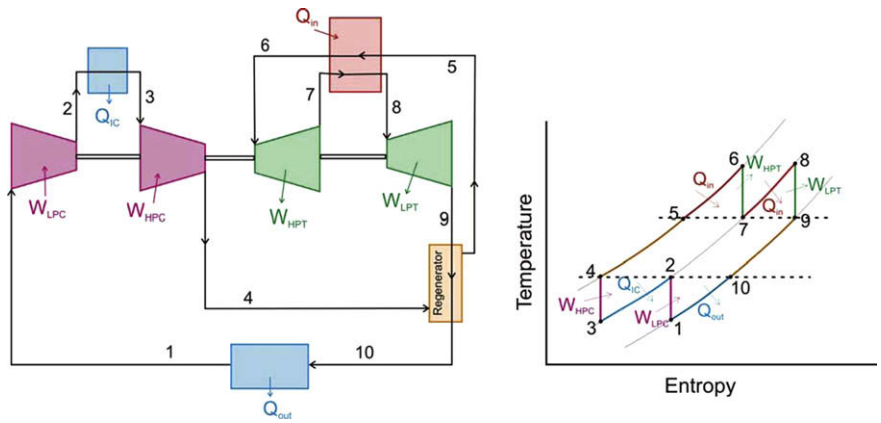

Fig. 11. Ideal Brayton cycle with regeneration and intercooling.

a graphite moderator, offers enhanced neutronic and thermal efficiencies. Table 4 summarises the HTGRs built to date and those currently being developed. Korea have also started a HTGR programme, however. have not yet chosen the final reactor design. The early reactors demonstrated key safety features and the use of TRISO coated fuel particles, where ceramic coatings are used to contain the fission products at high temperatures. This fuel design is a key feature of HTGRs. The value of the inherent safety features of this type of small HTGR were only fully recognised after the 1979 Three Mile Island accident in the USA. Following the early development of HTGRs, General Atomic received orders for several large 2000–3000 MWt plants. The orders were, however, cancelled following the oil embargo in the 1970s and the resulting reduced energy demand and reduced need for new electricity generation. Recently there has been much renewed interest in HTGRs, particularly as they are included in the Generation IV programme. At the end of the last century, the HTTR and HTR-10 were built in Japan and China, respectively. Current reactor designs are based on the experience gained from the early reactors.

4.1.1. The early reactors

Much of the technology employed today is based on that from the AVR, THTR and Fort St Vrain reactors. In the 1970s and 1980s Germany was a world leader in HTGR technology. The 46 MWt AVR was a first-of-its-kind pebble bed reactor which had an average outlet temperature greater than 950 °C for more than 10 years (IAEA, 1999). A large number of fuel elements were tested during this time. The AVR was followed by the Thorium high temperature reactor (THTR), which was designed to demonstrate the viability of sub systems and hardware designs (Breitenfelder et al., 1980). In its short active lifetime, many of the safety features were demonstrated, however, it was shut down prematurely, primarily due to political reasons. The Germans also began design of the HTR-100 and HTR-500 reactors, with electrical outputs of 100 MWe and 500 MWE, respectively. The thermal rating of the HTR-500 was a massive 1390 MWt (Wachholz, 1988). Neither were constructed as the German nuclear programme was shut down.

The Fort St Vrain reactor was successful in demonstrating the overall systems performance as well as design features of the HTGR (Bramblett et al., 1980). Many problems were encountered during start-up and power rise experiments, particularly connected with the circulators and with temperature fluctuations. In 1989 the plant was shut down due to continuing problems and it became the first nuclear plant in the USA to be decommissioned.

4.1.2. Reactor developments

In order to maintain the coated fuel temperatures below damage limits, original HTGR designs were limited to about

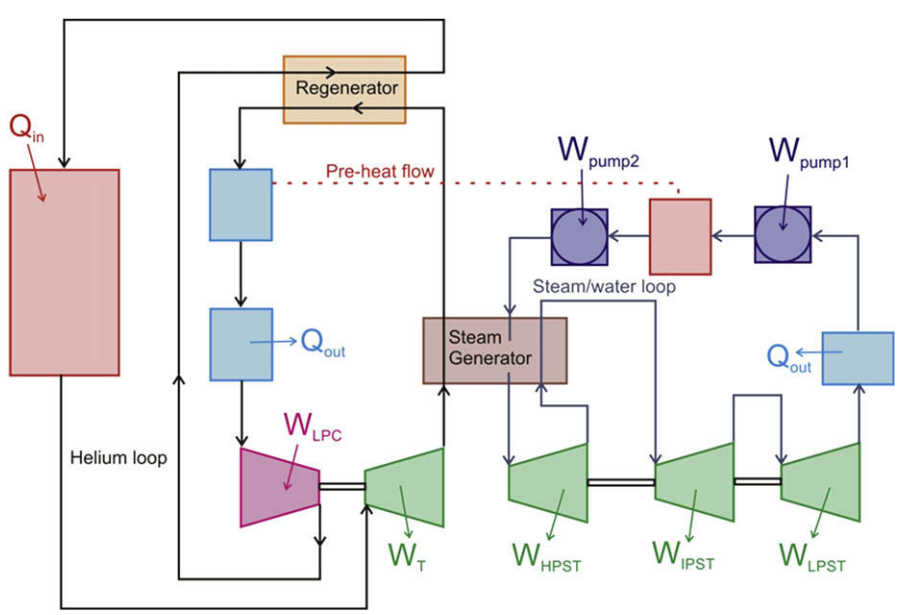

Fig. 12. Single shaft, direct, combined cycle.

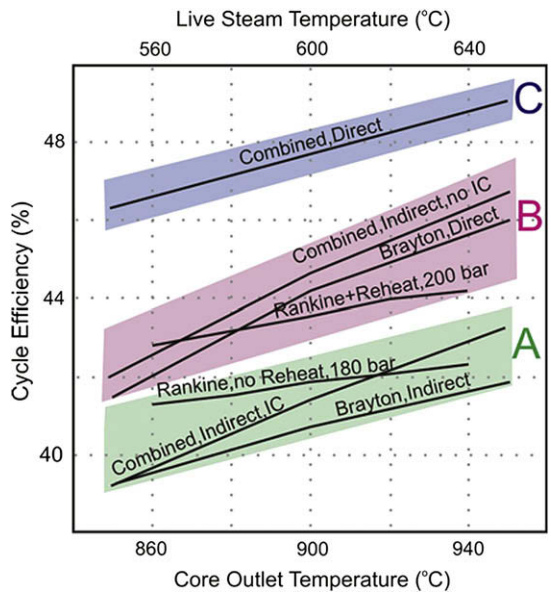

Fig. 13. Efficiency comparison for different PCSs (Frohling et al., 2002).

200 MWt due to passive heat decay removal. However, plants of this size were not predicted to be economically competitive. This led to the development of an annular core concept, which gives a maximum reference core power of 600 MWt. The resulting HTGR design represents a fundamental change in reactor design and safety philosophy. The PBMR, GTHTR300, HTR-PM, GT-MHR and ANTARES designs, which are currently being developed, all use the annular core design. These reactors, as well as the HTTR and HTR-10, are discussed in Sections 4.1.1–4.1.5.

4.1.3. Critical facilities

Many features of HTGR designs have been tested in critical facilities. There are two centres outside of the main reactor programmes, the ASTRA and HTR-PROTEUS facilities. The ASTRA facility at the Kurchatov Institute in Russia is used for experimental investigations of the neutronics and criticality safety of HTGR reactors (Ponomarev-Stepnoi et al., 2003). The assembly is essentially a reactor-grade graphite block shaped as a cylinder, the central cavity of which is filled with spherical elements. Fuel elements, along with graphite and absorbing elements, are employed in different core configurations. The facility was used to simulate early HTGR designs in Russia and has since been used to simulate the PBMR reactor and the GT-MHR project. The HTR-PROTEUS experimental programme was carried out from 1992 to 1996 at the Proteus critical facility in the Paul Scherrer Institut in Switzerland (Kuijper et al., 2006). Benchmark calculations and cold critical experiments for fresh low enriched uranium (LEU) particles were carried out. The results were fed into the HTR-N project, part of the European Union 5th Framework Programme, investigated high temperature reactor nuclear physics, and waste and fuel cycles (Kuijper et al., 2006). The Proteus facility is now being used to investigate Light Water Reactors (LWRs).

Table 4
HTGR plants operated and those in development.

Reactor	Location	Power (MWt)	He temp. in/out (°C)	Core	Operation years
Dragon	UK	20	350/750	Cylindrical	1965–1975
Peach Bottom	USA	115	377/750	Cylindrical	1967–1974
AVR	Germany	46	270/950	Pebble bed	1968–1988
Fort St Vrain	USA	842	400/775	Hexagonal	1976–1989
THTR	Germany	750	270/750	Pebble bed	1985–1989
HTTR	Japan	30	395/950	Hexagonal	1998
HTR-10	China	10	250–300/ 700–950	Pebble bed	2000
PBMR	SA	500	350/950	Pebble bed	In development
ANTARES	France	600	400/850	Hexagonal	In development
GT-MHR	USA/Russia	550–600	490/950	Hexagonal	In development
HTR-PM	China	450	250/750	Pebble bed	In development
GTHTR300	Japan	600	589/850	Hexagonal	In development

4.1.4. Computations

HTGR designs present computational challenges due to their core physics and thermal–hydraulic characteristics, for example, the gas flow in a high temperature, high burn up, porous ceramic core is unique to the HTGR design. Validation of the HTGR codes used is essential for the assessment of design uncertainties and therefore for the development and licensing of the reactors. Computational benchmarks have been proposed by the IAEA coordinated research project (CRP-5), calculated by comparisons of different models and data available (Colak et al., 2006; Wu and Yu, 2007). Data from the HTTR, HTR-10, ASTRA and PBMM (Pebble Bed Micro Model) were included. The benchmarks provide a useful framework for assessing computational uncertainties. As well as experimental studies, the HTR-N project also involved the validation of computational tools and the qualification of models. The activities were centred on the two existing HTGRs, i.e. the HTR-10 and HTTR, as well as results obtained from HTR-PROTEUS. Computational results agreed well with the data produced experimentally. Analyses were also performed on a number of conceptual HTGR designs, derived from reference pebble bed and hexagonal block type HTGRs. Several HTGR concepts were shown to be promising as systems for the incineration of plutonium and possibly minor actinides. The 5th Framework programme funded several other projects on HTGR technology which led on to the RAPHAEL IP, funded by the 6th framework programme and described in Section 4.1.10.

4.1.5. HTR-10 and HTR-PM

The HTR-10 is built on the site of Tsinghua University's Institute of Nuclear Energy Technology (INET) near Beijing in China and is part of the Chinese national High Technology R&D Programme (Zhang and Yu, 2002; Xu et al., 2005). Design began in 1992, construction commenced in 1995, and the reactor was completed in 2000. First criticality was reached in December 2000 and full power operation began in January 2003. The objectives of the HTR-10 are to verify and demonstrate the technical and safety features of the modular HTGR and to establish an experimental base for developing nuclear process heat applications (Hu et al., 2006).

The HTR-10 is a pebble bed reactor and uses fuel pebbles of graphite spheres of around 6 cm diameter dispersed with TRISO fuel particles. The reactor core is a 1.8 m diameter void in the graphite reflector and contains around 27,000 fuel elements (IAEA, 2003). In the side reflector are holes which guide the control rod system. The fuel elements move through the core in a "multi-pass" pattern, enabling a relatively uniform burn up distribution in the core. Fuel pebbles are continuously discharged through a pneumatic pulse single exit gate at the bottom of the core and are either discarded or returned to the top depending on their burn up. The helium coolant flows downwards through the bed at a rate of 4.3 kg/s (Kuijper et al., 2006). Despite its small power size, the HTR-10 is nearly a 1:1 scale test of a modular HTGR and so is a representative test for the passive decay heat removal. Five safety verification experiments were carried out in October 2003 which demonstrated and verified many inherent safety features of the modular HTGR.

There are two operational phases for the HTR-10. In the first, which was employed at start-up and operated for several years, the plant operated with a helium outlet temperature of 700 °C and inlet

of 250 °C. The secondary circuit included a steam turbine cycle for electricity generation with the capability for district heating. The reactor core and steam turbine were housed side by side in separate steel pressure vessels. In the second phase, named HTR-10GT, a direct helium gas turbine Brayton cycle replaces the steam cycle. The reactor will be operated with a core outlet temperature of 900 °C and an inlet of 300 °C. This phase is currently at the design optimisation stage (Guojun et al., 2007). The gas turbine, which is vertically mounted and housed in a separate pressure vessel, employs 2-stage compression (Wu and Yu, 2007).

In 2004, INET signed an agreement with the China Huaneng Group (CHNG) and China Nuclear Engineering and Construction Corporation (CNECC) to build a HTGR demonstration plant using the pebble bed modular technology, named HTR-PM. The HTR-PM will be similar in design to the HTR-10, however, will consist of two 250 MWt reactors, each having an annular core with one central column of moveable graphite spheres (Zhang et al., 2006; Wu and Yu, 2007). Original plans were to use a Brayton cycle for electricity generation, however, the technology was deemed to be too uncertain at that time and so a Rankine steam cycle will be used instead. Once tested and verified in the HTR-10GT project, the gas turbine may be used in the HTR-PM in the future. There are many technical and engineering problems which need to be solved over the next few years in order to achieve the target of completion in 2012.

4.1.6. HTTR and GTHTR300

The High Temperature Engineering Test Reactor (HTTR), constructed at the Japan Atomic Energy Agency (JAEA, formerly the Japan Atomic Energy Research Institute, JAERI) site at Oarai in Japan, is a graphite moderated helium cooled reactor with a maximum outlet temperature of 950 °C. Development work started as early as 1969 under the Japanese Long-term Programme for Research, Development and Utilisation of Nuclear Energy. The reactor first attained criticality in November 1998 (Ogawa and Nishihara, 2004). This was followed by "rise to power" tests which resulted in full power operation with an outlet temperature of 850 °C in December 2001, and high temperature operation at 950 °C in April 2004 (Nakagawa et al., 2004; Fujikawa et al., 2004). The objectives of the HTTR are to establish HTGR and nuclear heat utilisation technologies, to carry out basic research on high temperature irradiation and to develop the technology for high temperature heat applications such as hydrogen production (Shiozawa et al., 2004).

The active core of the reactor is 2.3 m in diameter and contains 30 fuel columns and 7 control rod guides. It is surrounded by a reflector which also contains control rods. Each fuel column is made up of hexagonal shaped pin-in-block type fuel elements, consisting of a graphite block with 33 fuel rods inserted in holes leaving small gaps for the helium coolant to pass by the fuel. The fuel rods are TRISO particles imbedded in graphite. The helium flows downwards through the reactor at a rate of 10.2 kg/s for 950 °C operation. To control over-reactivity, burnable poison is applied to some of the fuel blocks. The reactor operates in batch mode so after each cycle part of the fuel is replaced. The HTTR has two modes of loop operation, single and parallel loaded mode. In the single loaded operation, only the main cooling system operates and the primary pressurised water cooler takes the full 30 MWt from the hot helium. In parallel loaded operation, the secondary cooling loop removes 10 MWt and the remaining 20 MWt goes to the primary loop.

In April 2001 JAEA began the design and development of a HTGR with a gas turbine electricity generation system, called the GTHTR300 (Kunitomi et al., 2004). It will produce 600 MWt energy and the objective is to establish a feasible plant design and helium gas turbine technology with the ultimate goal of demonstration of a prototype in the 2010s for commercialisations in the 2020s (Takizuka et al., 2004). The deployment roadmap for the GTHTR300 contains three phases: plant design and technologies R&D which was carried out at JAEA up to the end of 2007 and was funded by the Japanese government; prototype plant demonstration which will be carried out from 2008 to 2018 and funded mainly by the private sector; and finally the full deployment phase. The primary system is housed in three steel pressure vessels: the reactor, the power conversion unit (PCU) and the heat exchanger vessel. A containment vessel for the reactor is not necessary as it is designed to be severe-accident-free, that is no large amount of fission product release from fuels in any postulated accident. A passive heat removal system is in place in case of the loss of forced cooling. The core design is essentially the same as that used in the HTTR, although the fuel columns are arranged in an annular ring of internal diameter 3.6 m and external diameter 5.5 m. Each fuel column contains eight layers of fuel blocks, which in turn contain 57 fuel rods each. A new refuelling method termed "sandwich shuffling" has been proposed. The design of the PCU is based on a regenerative, closed Brayton cycle using helium gas (Yan et al., 2003). No intercooling is used, as this simplifies the cycle, however, does give a 2% efficiency reduction (Kunitomi et al., 2004). The system includes one turbine and one compressor on a common, horizontally mounted shaft. There are several major R&D issues which need to be overcome in order to demonstrate the feasibility of the design.

4.1.7. PBMR

The Pebble Bed Modular Reactor (PBMR), under development by PBMR Pty (Ltd), Eskom and partners around the world, has been in development since 1994 (Koster et al., 2003). The South African government provided significant funding for the project and stated an objective of producing 4000 MWe from PBMRs (Matzner and Wallace, 2005). The initial design was for a 268 MWt reactor with a core consisting of fuel spheres and a dynamic central reflector column of graphite spheres. However, as more insight on graphite behaviour was gained, the core structure was redesigned to allow a possible mid-life replacement of the reflector layer adjacent to the core. This allowed the design to implement a fixed central column. The core outer diameter is 3.7 m and inner diameter 2 m. Inside the core are around 452,000 fuel pebbles consisting of TRISO fuel particles encased in a graphite sphere (Wallace et al., 2006). The helium coolant flows at a rate of 185 kg/s. Online refuelling is a key feature of the PBMR and on average each fuel pebble will make six passes through the reactor. The aim is to operate uninterrupted for 6 years before the reactor is shut down for a nominal 30 days of scheduled maintenance. The reactor is housed in a building, part of which is a thick reinforced concrete containment structure called the citadel. Much of the PBMR can be built in the factory instead of onsite leading to lower costs and time frames.

A direct helium Brayton cycle is to be coupled to the PBMR for electricity production (Matzner et al., 2006). The helium turbine is a high-technology item and has some similarity with a jet engine. Mitsubishi Heavy Industries, one of the world's major producers of power turbines, is being employed to use their experience and expertise to develop the gas turbine. As the PBMR is the first reactor that will use a direct Brayton cycle, simulations of its unique features are very important (Venter and Mitchell, 2007). Flownex, a CFD software package, was adapted to include all the major components of the PCS, including the pebble bed reactor itself. One of the distinguishing features of the PCS chosen is that three separate shafts are used. In order to gain a better understanding of the dynamic behaviour of the system, a functional model, termed the Pebble Bed Micro Model (PBMM), was created (Greyvenstein and Rousseau, 2003). The objective of the model was not to address specific helium related issues, or test individual components, but to produce the same overall performance characteristics and control

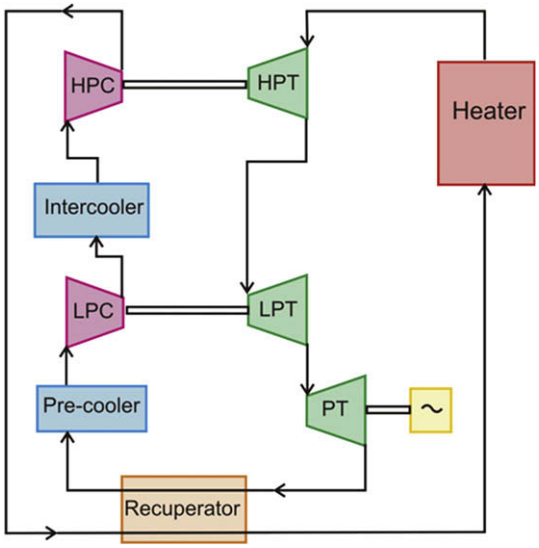

Fig. 14. Schematic of the PBMM.

topology as that of the prototype plant. Nitrogen is therefore used as the working fluid, allowing the use of conventional turbines and compressors, and an electric heater is used as the heat source. A schematic of the PBMM is shown in Fig. 14. As well as operation of the Brayton cycle, control strategies for start-up, load following and load rejection were demonstrated. Flownex was successfully used to aid the design of the PBMM and to simulate the results (Matzner, 2004).

The Helium Test Facility (HTF), built at NECSA in Pretoria, is used to test system components up to 1100 °C at high pressure (Matzner, 2004). A heat transfer test facility (HTTF) is being built in association with North-West University and should be in operation this year (Rousseau and van Staden, 2006). Its purpose is to validate correlations that are used to model heat transfer and fluid flow phenomena. It does not represent a scale model of the reactor, but is some representative sections of the core suitable for performing tests.

The construction of the 400 MWt PBMR demonstration power plant (DPP) on the Koeberg site is expected to be completed during 2010 (Greyvenstein et al., 2006). The DPP includes a horizontal single shaft recuperative Brayton cycle with pre- and intercooled two stage compression. The DPP will be followed by the construction of commercial units, the first of which are to be produced by 2014 (Tennenbaum, 2006). The PBMR Advanced Electricity Plant (AEP) consists of a 500 MWt PBMR reactor coupled to a combined cycle, involving a topping Brayton cycle and a bottoming Rankine cycle. The envisaged Brayton cycle builds on knowledge gained from the DPP and so should avoid first of a kind engineering issues (Matzner et al., 2006).

4.1.8. GT-MHR

The GT-MHR (Gas Turbine Modular Helium Reactor), being developed by General Atomic (GA), couples a HTGR contained in one pressure vessel with a high efficiency Brayton cycle gas turbine system in an adjacent pressure vessel (LaBar et al., 2004). The plant is designed for a 60-year life and the entire reactor confinement structure is underground. The reactor employs block type fuel elements, each of which contains 210 blind fuel holes, 108 coolant holes and 3126 fuel compacts (Richards et al., 2006b). A fuel compact is made up of TRISO coated particles in a carbonaceous matrix. The reactor core consists of 102 fuel columns in three annular rings, with 10 fuel blocks in each column. The outer reflector contains 36 control rods, whilst the core contains 12. During operation only the control rods in the reflector are in use. Studies on an indirect, multi-shaft Brayton cycle were conducted and work is being conducted at INL to improve the efficiency of the cycle (Oh and Moore, 2005). Simulations suggest that using supercritical CO_2, instead of helium, in the Brayton cycle increases the cycle efficiency. More recently, a direct Brayton cycle was deemed to be more efficient and economical (INL, 2007).

For electricity production, the MHR will operate with a power level of 600 MWt and an outlet helium temperature of 850 °C. The inlet helium temperature is 490 °C, which allows high efficiency operation of the Brayton cycle and acceptable operating conditions for a reactor vessel made from a Cr–Mo steel. Using 850 °C as an upper temperature eliminates the need for turbine blade cooling and ensures acceptable performance of the fuel particles during normal operation. For hydrogen production, it is desirable to increase the helium outlet temperature in order to improve efficiency and economics. Design points of 950 °C and 590 °C were selected for the outlet and inlet, respectively. This allows a sufficiently high coolant flow and convective heat transfer rate.

4.1.9. ANTARES

The French ANTARES programme is a research partnership between AREVA NP, CEA and EDF aimed at the development of an industrial HTGR prototype. All three partners are also involved in the RAPHAEL project. It distinguishes itself from other concepts due to its flexible design, employing an indirect cycle which allows decoupling of the nuclear reactor from different possible applications (Billot et al., 2006). The reactor consists of an annular core with hexagonal block type fuel assemblies. A significant R&D programme is currently underway, looking at materials development, fuel fabrication and many other aspects. The programme is in the pre-conceptual design stage and the preliminary design is expected to be ready in 2010. It is based on the GT-MHR concept.

4.1.10. RAPHAEL

In April 2005, the RAPHAEL IP (ReActor for Process heat, Hydrogen And ELectricity generation Integrated Project) was launched as part of the European Union 6th Framework programme. It addresses the viability and performance issues of innovative HTGRs designed to provide both electricity and process heat. The project was initiated based on the success of several smaller projects, such as HTR-N mentioned above and HTR-E. The HTR-E project, funded by the 5th Framework programme, had the objective to develop innovative technologies needed for the components and systems of a HTGR with a direct cycle, with reference to existing industrial projects at that time (GT-MHR and PBMR). Design recommendations were made for the helium turbine, recuperator, bearings and seals (Besson et al., 2006). The RAPHAEL consortium includes 33 organisations from 10 European countries. The project explores the performance of fuel, materials and components, the reactor physics models, the nuclear safety and waste disposal issues, the overall system integration and potential interfaces with hydrogen production. In collaboration with the HYTHEC project, interface requirements have been described. The main priorities are the increase of performance and the adaptation of technologies to the needs of heat supply for industrial purposes (Hittner et al., 2006). The ambition of RAPHAEL is to bring much needed R&D support and so be a leading force in the development of HTGRs.

4.1.11. NGNP

The US DoE Next Generation Nuclear Plant (NGNP) is planned to be a "demonstration of the technical, licensing, operational and commercial viability of HTGR technology for the production of process heat, electricity and hydrogen" (INL, 2006, 2007). Three teams, led by Westinghouse, AREVA NP and GA, are developing the

Table 5
Nuclear hydrogen programmes.

Company	JAEA	GA	PBMR/Westinghouse	AREVA NP
Country	Japan	USA	SA/USA	France
Reactor	GTHTR300	MHR-GT	PBMR	ANTARES
Power	600	550–600	500	600
PCS	Brayton	Brayton	Rankine	Rankine
HPP	SI	HTE/SI	HyS/HTE	HTE/SI
Cycle configuration	Direct PCS, series indirect HPP	Direct PCS, parallel indirect HPP	Indirect, series HPP and PCS	Indirect, parallel HPP and PCS
IHX	Helical coil S&T	Single-stage PCHE	Two stage PCHE	PCS: helical coil S&T Process: PCHE or fin plate

basis for selection of the specific design and operational characteristics of the NGNP. The work included completion of specific studies to address key aspects of the NGNP, followed by cost estimates and schedules for design, construction and operation. Key decisions on the choice of a conceptual design are scheduled for mid 2008. In the project, emphasis is put on initiating design and licensing work as early as practical to help focus R&D activities. It is expected that operation will commence in 2018 and continue for two to three years after which equipment performance will be confirmed by disassembly and inspection.

4.1.12. Korea

The Korea Atomic Energy Research Institute (KAERI) have a strong programme developing nuclear technologies, with the aims to be on par with advanced countries by the early 2000s in terms of safety and economic value, and to establish a base in the national energy supply. KAERI aim to demonstrate massive scale hydrogen production using a VHTR by the early 2020s. A key target is to obtain an operating licence for a Nuclear Hydrogen Development and Demonstration (NHDD) reactor (Chang et al., 2007). There are four candidate core designs being explored for the 200 MWt demonstration plant, two prismatic modular reactors and two pebble bed reactors. The two design types are scaled down versions of the GT-MHR and PBMR. The pre-conceptual design is expected to be ready this year, the engineering design finished by 2014 and construction to begin in 2016 ready for operation in 2020. KAERI have links with both JAEA in Japan and INET in China and in 2005 set up a programme with the US involving GA as part of the I-NERI contract.

4.2. Gas Cooled Fast Reactor (GFR)

All the HTGRs discussed above operate in a once-through cycle and the particle fuel employed allows a significant increase in discharge burn up and so reduced waste generation per unit of produced energy in comparison to current LWRs. However, in the long term, adaptation of a closed cycle will be necessary to minimise waste and efficiently utilise uranium resources. A gas cooled fast reactor (GFR), which can achieve high uranium utilisation and recycling of actinides whilst benefiting from the high efficiency of gas cooled reactors, is therefore of considerable interest (Hejzlar et al., 2005). Research was carried out on GFRs in the 1970s, however, like other nuclear technologies, it was stopped until recently. Currently the most extensive investigations are being carried out by CEA and Argonne National Laboratory under the I-NERI programme. The reference design employs a steel reactor vessel with a high power density core coupled to a direct helium Brayton cycle. The high power density and no need for moderator lead to a very compact design, but pose challenges for decay heat removal. A guard containment and low pressure drop core address this problem, allowing decay heat removal by circulation of helium under elevated pressure. To date much R&D has been carried out, however, much more is needed before design and construction of a plant can be realised.

The remainder of this report, therefore, concentrates on coupling an HTGR with a hydrogen production plant.

5. Nuclear hydrogen production plant

All of the HTGR programmes detailed in Section 4.1, with the exception of that of the Chinese, are developing a hydrogen production plant to couple to the nuclear reactor. The Chinese HTR-10 and HTR-PM programmes are concentrating solely on electricity production. The choice of hydrogen production plant (HPP), the power conversion system (PCS) used and the plant layout differ significantly between programmes. Indirect or direct coupling can be used, as can series and parallel placement of the HPP and PCS. Table 5 gives a summary of the different programmes, including the selection of the intermediate heat exchanger (IHX), a key component in the system. The following sections describe each of these programmes in detail.

There are also significant research programmes investigating HPPs using HTE and the SI and HyS cycles in countries and regions which do not have programmes researching coupling, HTGRs and Generation IV reactors. These are briefly described in Section 5.8.

5.1. JAEA

JAEA are currently the only institution to have a working HTGR and a nuclear hydrogen programme, putting them ahead of the rest of the world in terms of nuclear hydrogen development. Originally, they focussed their nuclear hydrogen programme on three distinct R&D areas:

1. Design work for steam methane reforming.
2. Large-scale SI cycle experiments.
3. Lab scale high temperature electrolysis experiments.

Two sets of lab scale experiments of high temperature electrolysis were carried out, the first with 12 tubular solid oxide cells in series, producing hydrogen at 44 Ncm^3/cm^2 h and 950 °C, and the second with a planar cell (dimensions 80 mm × 80 mm), producing hydrogen at 38 Ncm^3/cm^2 h and 850 °C (Hino et al., 2004). However, neither experimental setup kept its integrity through one thermal cycle. Long term, costly developments were deemed necessary, and, considering the return on investment, the study on HTE was halted.

The HTTR has thus far only been used for electricity production. However, the design includes an intermediate heat exchanger (IHX), installed in a reactor containment vessel, which can supply 10 MW of thermal energy to a heat utilisation system (Ohashi et al., 2004). This corresponds to a third of the HTTR power. Steam methane reforming will be the first heat application coupled to the HTTR. This will be the world first demonstration of hydrogen

production coupled to a HTGR. First, a mock-up test facility using an electric heater as the heat source was created in order to demonstrate the control technology. It is approximately a 1/30 scale model of the HTTR hydrogen production system. Performance tests were carried out at the same reaction conditions as those of the HTTR hydrogen production system and hydrogen was stably produced at a rate of 120 m^3/h. Fluctuations of the helium outlet temperature from the steam generator and the pressure difference in the steam reformer can both be controlled within allowable ranges (Inaba et al., 2005). Construction of the HTTR hydrogen production system is now underway and demonstration tests are planned for 2009.

In the long run, JAEA are aiming to produce hydrogen from water, and so eliminate the carbon emissions associated with SMR. Efforts are being concentrated on the Sulphur Iodine cycle for mass scale production. The coupling technologies between the HTTR and SMR system have many similarities with those that will be used for the coupling of the SI cycle and so are an important step in development of the GTHTR300C, the name given to the GTHTR300 reactor with combined electricity and hydrogen generation. The GTHTR300H system will produce much more hydrogen than electricity. R&D on the SI process was split into several stages: Initial lab scale demonstrations before 1998, bench scale demonstrations from 1999 to 2005, then pilot-scale tests and finally HTTR-IS process tests (The Japanese refer to the Sulphur Iodine cycle as the IS cycle.) (Kubo et al., 2004a). The knowledge gained through HTTR and SI cycle improvements will then be combined in the design and construction of the GTHTR300C (Shiozawa, 2007).

The bench scale studies were split into three main sections:

1. Study on advanced HI processing.
2. Bench scale demonstration of the whole process.
3. Screening of corrosion resistant materials.

HI processing is one of the areas requiring the most development in the SI cycle as it has a high energy demand and complicated separations. The Japanese are investigating using electroelectrodialysis to concentrate the HI_x solution. Process simulations suggest that this can significantly increase process efficiency (Hwang et al., 2003). The bench scale experimental facility is made of glass, quartz and fluorine resin equipment and contains over ten chemical reactors and separators (Kubo et al., 2004b). Continuous, closed cycle operation was demonstrated for 20 h producing hydrogen at a stable rate of 31.5 L/h. The Bunsen section was operated at 70 °C, the H_2SO_4 section at 850 °C and the HI section at 500 °C, with all three being at atmospheric pressure.

The pilot plant is designed using industrial materials (identified during Section 3 of the bench scale studies above) and aims to produce 30 Nm^3/h hydrogen using electrically heated helium as the process heat supplier (Kubo et al., 2004a), as well as obtaining engineering data for constructing and operating larger plants. A major part of the pilot-scale demonstration is designing and building the reactors from corrosion resistant materials and testing their structural integrity. Hydrogen production tests will verify the developed control protocol and be used to verify an analytical code system (Terada et al., 2007). R&D so far has concentrated particularly on the H_2SO_4 and SO_3 decomposers. The construction and the operation of the pilot-scale plant are planned to take 6 years, the first half being construction and the second half operation.

During the pilot-scale tests, the design study for the HTTR-IS is also being carried out. The aims of the HTTR-IS are to: establish procedures on safety design and evaluation, develop technology on key components, establish the control technology, and to gain construction, operation and maintenance experience (Sakaba et al., 2007). Basic design of the HTTR-IS system is planned to be completed by 2010. Process heat from the HTTR will be transferred to the SI plant through an intermediate heat exchanger. The secondary helium loop supplies heat to the H_2SO_4, SO_3 and HI decomposers. The plant aims to produce 1000 Nm^3/h of hydrogen at a thermal efficiency of around 40%. If achieved, this will confirm the economic prospects of commercial water splitting nuclear hydrogen production systems. Two methods are proposed to increase the yield of the HI decomposition reactor. The first employs absorbing the iodine in the HI vapour with cobalt, which entails the addition of a cobalt recovery column to the process flowsheet. The second option, which gives a higher hydrogen yield and higher efficiency, involves the application of a hydrogen permeable membrane reactor (HPMR). This reduces the temperature required in the HI decomposition reactor.

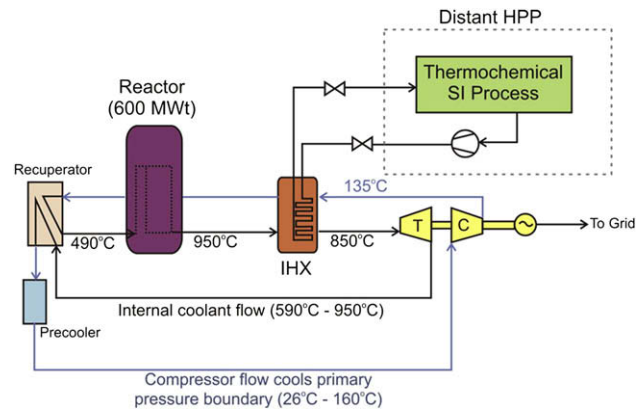

Fig. 15. Process scheme for the GTHTR300C (Sakaba et al., 2007).

An important design objective for the GTHTR300C is the use of technologies already accumulated in JAEA so that any new technological development is limited and the investment risk is minimised (Sakaba et al., 2007). The aim is that the system will be technically feasible and economically attractive by 2030. The design of the GTHTR300C is almost the same as that of the HTTR-IS system, and uses Co to absorb I_2 in the HI decomposition reactor. The technology developments underway for the GTHTR300 reactor will also be employed. The layout of the GTHTR300C is shown in Fig. 15. The helically coiled intermediate heat exchanger (IHX) is the same as that used in the HTTR-IS and is installed between the reactor pressure vessel (RPV) and gas turbine (GT) system. Despite the smaller size, no major changes are made to the GT from the GTHTR300 design. The primary coolant pressure employed for the GTHTR300C is around 5 MPa, 2 MPa lower than that in the GTHTR300 (Kunitomi et al., 2007). The higher pressure is not required as there is no gas circulator which requires down-sizing. Using a lower pressure helps extend the lifetime of the heat exchangers and despite increasing the turbine costs, the saving in costs for the heat exchangers, and pressure vessels means no economic penalty is paid.

Table 6 summarises the R&D stages at JAEA and highlights the depth of the research programme.

5.2. GA

At GA two technologies have been selected as leading candidates for coupling to the MHR: the SI cycle and HTE (Richards et al., 2006b). The combination of the hydrogen production plant and the reactor is entitled the H2-MHR. For the H2-MHR the outlet temperature of the helium from the MHR is increased to 950 °C in order to improve efficiency and economics. This also necessitates a 100 °C increase in outlet helium temperature from the HPP, to 590 °C, to ensure acceptable fuel performance. Current schedules suggest that construction of a H2-MHR will begin in 2015, with operation commencing in 2020.

Table 6
R&D work at JAEA.

R&D stage	Lab	Bench	Pilot	HTTR-IS	GTHTR300C	GTHTR300H
H_2 production rate (Nm^3/h)	~0.001	~0.03	~30	~1000	~25,000	~50,000
Heat supply	Electric	Electric	Helium heated electrically	Helium heated by HTTR	Helium heated by GTHTR300	Helium heated by GTHTR300
Power for SI plant (MWt)				10	170	371
Materials	Glass	Glass	Industrial	Industrial	Industrial	Industrial
Process pressure	Atm	Atm	High	High	High	High
Electricity production (MWe)					202	87
Net efficiency				40–44%	46–49%	42–49%

5.2.1. SI-based H2-MHR

In the SI-based H2-MHR the power conversion unit of the MHR is replaced with an intermediate heat exchanger (IHX) and a helium circulator on the cold leg of the primary helium circuit, as shown in Fig. 16 (US DoE NERI, 2006). Heat transfers through the IHX to the secondary helium loop, which in turn transfers heat to the hydrogen production plant (HPP). The secondary helium loop includes a 115 m horizontal separation between the IHX and the HPP. This is deemed to be an acceptable distance to protect the MHR from any potential hydrogen explosions in the HPP. The SI flowsheet being developed through the I-NERI programme, as discussed in Section 2.1.1, is used for the HPP. In 2006, the flowsheet included a reactive distillation step in the HI processing section. This requires a significant amount of electricity for shaft work, including heat pumps with vapour recompression. For a plant consisting of four MHR units (2400 MWt), the total electricity requirement of the HPP is about 800 MWe, the bulk of which is needed for the process pumps. If the electricity is generated at 48% efficiency using additional GT-MHR modules, the overall efficiency is estimated to be 45% (HHV) using AspenPlus. This produces approximately 368,000 tonnes H_2/year at a pressure of 4 MPa. The flowsheet is being continually refined, and the design is likely to change over the coming years. Of particular note is the recent idea of switching back to using extractive distillation as opposed to reactive distillation as it is a proven technology.

The primary helium loop and sulphuric acid decomposition will be operated at a pressure of around 7 MPa. The secondary helium circuit will be operated at a slightly higher pressure to ensure that any radioactive leak from the MHR and/or chemical leak from the HPP do not cross the heat transfer surfaces and so contaminate the secondary helium circuit. Both helium circuits have a slipstream helium purification train to prevent contamination of the hydrogen produced with tritium or other radioactivity. The intermediate heat exchanger (IHX) design consists of 40 printed circuit heat exchangers (PCHE), a concept developed by Heatric. Each module has a duty of 15 MWt and weighs around 5 tonnes.

Hydrogen production costs, taking into account capital and operating and maintenance costs, are estimated to be $1.97/kg.

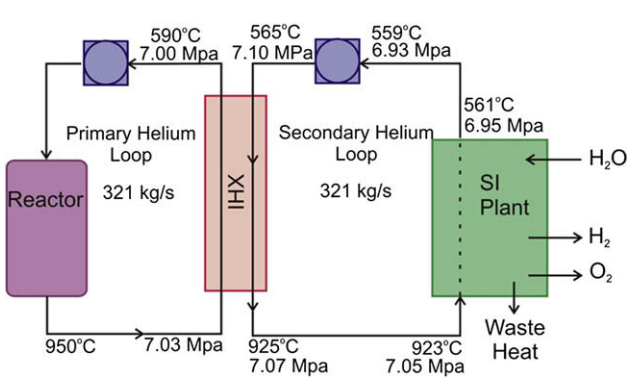

Fig. 16. Process schematic of the SI-based H2-MHR (US DoE NERI, 2006).

5.2.2. HTE-based H2-MHR

The HTE-based H2-MHR design includes a direct PCS and an indirect HTE plant positioned in parallel, as depicted in Fig. 17 (Richards et al., 2006b). The MHR supplies both the heat to generate steam and the electricity required by the electrolysers. Approximately 90% of the thermal energy from the MHR is used to generate electricity, with the remainder being transferred through the intermediate heat exchanger (IHX) to the steam generator. Steam is supplied to both the anode and cathode sides of the electrolyser. That on the cathode side is split into hydrogen and oxygen, whereas that on the anode side is used as a sweep gas to collect the oxygen. A small quantity of electricity is generated from the oxygen/steam stream which is used to provide power in the plant house. The plant produces 268,000 tonnes H_2/year at an efficiency of 55.8% (HHV), with a product hydrogen pressure of 4.95 MPa.

The solid oxide electrolyser (SOE) module design is based on the planar cell technology being jointly developed by INL and Ceramatec. A module will contain 40, 500-cell stacks, with a total electricity consumption of 500 kWe. It is estimated that the hydrogen production cost will be $1.92/kg.

5.3. PBMR

PBMR have a partnership with Westinghouse and the Shaw Group developing the HyS cycle for hydrogen production. The cycle is configured to optimally use the thermal and electrical energy from a PBMR, and was chosen due to its simplicity compared to other cycles (Correia et al., 2006). Several different heat transfer configurations have been evaluated:

1. Indirect Rankine cycle in series with IHX (indirectly coupled to HPP).
2. Direct Brayton in series with IHX (indirectly coupled to HPP).
3. Direct Brayton cycle in parallel with IHX (indirectly coupled to HPP).
4. Separate nuclear plants for thermal coupling and electricity generation.

Each configuration has advantages and disadvantages. The first option has fewer components on the primary nuclear loop and utilises standard Rankine technology, however, presents more complicated safety considerations. Option 2 is ideal for process applications with low energy demands relative to electricity generation, however, the Brayton cycle is less efficient at lower temperatures and is sensitive to energy demands on the process side. Parallel operation, as in option 3, allows individual control over the two sections, however, presents problems in control and mixing of the two hot helium streams. The final option allows optimisation of the two plants individually, however, the HyS process requires high temperature and, due to constraints on the reactor inlet temperature, the hot helium would need to be cooled resulting in waste heat. Analysis showed that the highest efficiency was achieved when no additional electrical power over that needed for the HPP was produced and that there is no significant efficiency

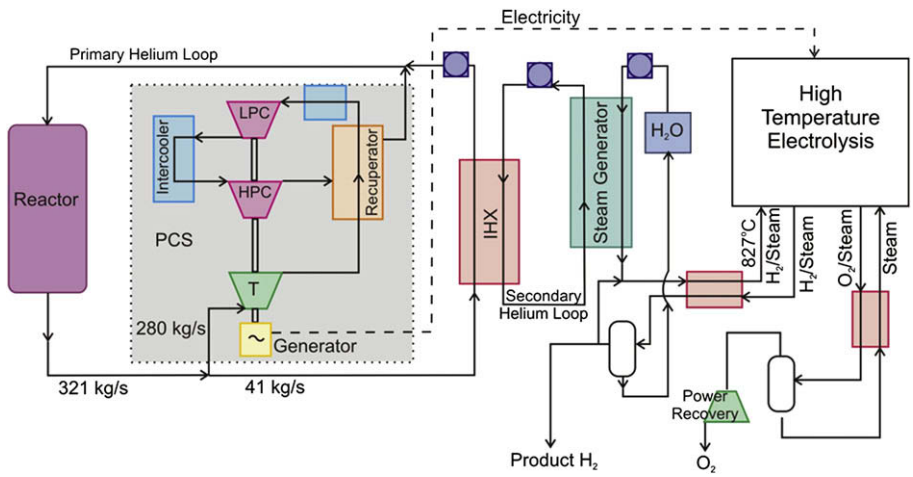

Fig. 17. Process schematic of the HTE-based H2-MHR (Richards et al., 2006b).

difference between using a high pressure Rankine cycle or a Brayton cycle (McLaughlin et al., 2005).

A version of option 1 was selected for detailed analysis (Lahoda et al., 2006), as shown in Fig. 18. The design is termed the "Four Pack" as it consists of four 500 MWt PBMRs, each coupled to a modular HyS plant through an IHX and a helium heat transfer loop. Each HyS plant consumes around 200 MWt energy, with the remaining 1200 MWt from the PBMRs powering a single Rankine cycle. About 400 MWt of low grade rejection heat from the HyS plants is used as water preheat in the PCS which generates about 600 MWe of electrical energy at an efficiency of greater than 38%.

Process simulations were carried out using ChemCad in order to size the vessels and processes in the system. The catalytic decomposition reactor is the most challenging piece of equipment to design, mainly due to materials selection problems encountered with the high operating temperatures. Eight bayonet style heat exchangers are employed, as well as a H_2SO_4 concentration column. Initial estimates suggest that the cost of hydrogen will be in the range \$2–\$3/kg, however, a number of technology developments need to be successfully addressed.

5.4. AREVA NP/CEA

The AREVA NP programme has identified HTE and the SI cycle as the two most promising candidates for nuclear hydrogen production and aims to build a commercial plant by 2040 (Rodriguez et al., 2006). Within the programme, the CEA is responsible for the majority of the work developing the SI cycle and HTE, as well as the coupling of the HPP to the nuclear reactor.

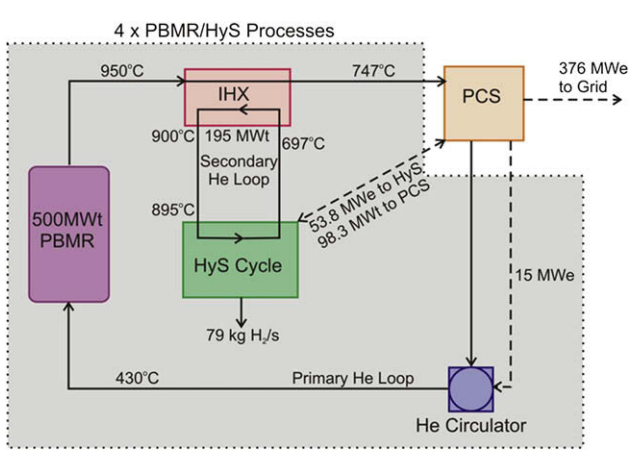

Fig. 18. Schematic of the Four Pack PBMR/HyS process.

The SI cycle is the reference process for the coupling studies (Barbier et al., 2006). Analysis on the cogeneration of heat and electricity has been conducted. The main issue of cogeneration is producing a flexible cogeneration ratio between electricity and hydrogen production. For the first option considered, a direct Brayton cycle operated in parallel with an indirect SI process, flexibility could be obtained by control of the helium inventory. However, the resulting circuit pressure decrease would increase circulator power consumption and so decrease the efficiency. The second option considered, parallel indirect operation of the PCS and HPP, involves separate circulators for the two systems and therefore flexibility can be controlled by the rotation speed of each circulator. Further studies are being carried out to investigate this option.

For the main safety and economic analysis, it is assumed that the 600 MW HTGR thermal power is totally dedicated to the HPP. An additional 100 MWe is required from the grid. Table 7 shows the energy requirements of each section of the HPP. The design of the HPP consists of ten "shops" operated in parallel. This allows design using conventional codes as individual equipment items are smaller, and ensures plant availability and acceptable chemical reactor dimensions. Heat transfer between the nuclear island and the HPP is performed via helium through a 200 m long insulated pipe. Safety constraints were analysed using a defence in depth (DID) concept. Economic analysis puts the cost of hydrogen production in the range 4–5€/kg, about 30% of which is energy consumption. Taking into account expected improvements due to R&D, a cost in the range 2–3€/kg is predicted. Of this 50–60% is due to energy consumption.

In 2002 the CEA launched an integrated research programme on the SI cycle, the work being split between the AREVA NP programme (Billot et al., 2006), the HYTHEC project (Le Duigou et al., 2007) and the CEA-GA-SNL I-NERI agreement. The goal is to choose the most promising way to produce nuclear hydrogen by 2008

Table 7
Energy needs of each section of a 1 kmol/s HPP (Vitart et al., 2008).

Section	Total energy requirement (MW)	Heat required (MWt)	Electricity required (MWe)
I: Bunsen	34	0	17
II: H2SO4	389	385	2
III: HI	376	214	81
Total	799	599	100

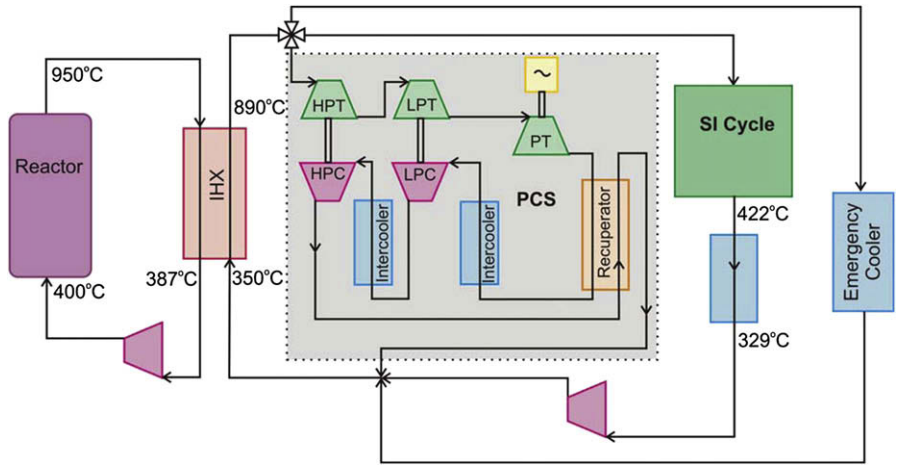

Fig. 19. The HYTHEC/RAPHAEL coupling scheme (de Lorenzo et al., 2006).

(Vitart et al., 2008). As well as flowsheet analysis, the R&D programme involves the design and building of reactors and the development of specific analytic methods to determine the composition of liquid and gas phases (Doizi et al., 2007). As part of the I-NERI contract, CEA have built a lab scale Bunsen reactor, which has been shipped to the US for combination with the other sections. Reactive distillation is a strong contender for decomposing the HI in the SI cycle, however, currently shows low efficiencies due to poor HI to H_2 conversion in the vapour phase (Goldstein et al., 2005). Advanced, inorganic hydrogen separation membranes are being developed to improve the process scheme. Corrosion tests are also being carried out to develop suitable materials for construction. The HYPRO project is intended to follow on from the lab scale I-NERI experiments. The objective is to demonstrate hydrogen production at a pilot scale on the helium loop facility (HELITE) that will be built at CEA Cadarache and able to deliver 1 MWt. The time schedule for HYPRO is around 2012. Initially the feasibility study will focus on the sulphuric acid decomposition, and in particular a high temperature heat exchange reactor for SO_3 decomposition ($CERSO_3$).

The CEA have also started a programme investigating HTE. Both developments of the cell, such as thermodynamic models and catalyst and electrode development, as well as the whole system, for example stack architecture and scale effects, are being investigated. The programme aims to produce a HTE demonstration module able to produce 200 l H_2/h in conjunction with the Norwegian University of Science and Technology.

5.5. European programmes

The HYTHEC and RAPHAEL European projects specialise in the SI cycle and VHTR development, respectively, and have worked in conjunction on the coupling between the two (de Lorenzo et al., 2006). The scheme developed is based on a self sustaining concept where all the electricity needed is supplied by the VHTR, making the net electricity balance zero. The layout involves coupling the SI cycle in parallel to both a Brayton cycle and a bypass in an indirect secondary circuit, as demonstrated in Fig. 19. Helium is used as the circulating fluid in the secondary circuit as well as the primary circuit due to its high heat capacity. Parallel indirect operation allows great flexibility – the electricity and hydrogen production can be altered as a function of the amount of helium bypassed. The three way valve is a key component of this design which does not feature in other layouts. It regulates the helium flow by iteratively solving the system equations to ensure the electricity demand is exactly met. The energy requirement of the SI cycle is 2169 kJ/mol H_2, 1665 kJ/mol H_2 of which is provided through internal heat recovery with the remaining 504 kJ/mol H_2 coming from the VHTR. The 319 MW of energy from the VHTR therefore produces a hydrogen flow of 633 mol/s.

5.6. US DoE Hydrogen Program and NHI

The US DoE Hydrogen Program was launched in 2004 to implement the President's Hydrogen Fuel Initiative (US DoE, 2007). Its mission is to "research, develop, and validate hydrogen production, storage, and fuel cell technologies and to overcome the non-technical barriers to the commercialisation of these technologies – with the ultimate goals of reducing oil use and carbon emissions in the transportation sector and enabling clean, reliable energy for stationary and portable power generation". The program is wide ranging, with research into hydrogen production from fossil fuels, biomass and water. One such research area is the Nuclear Hydrogen Initiative (NHI), the goal of which is to demonstrate the economic, commercial-scale production of hydrogen using nuclear energy. Five major National Laboratories, Sandia (SNL), Savannah River (SRNL), Idaho (INL), Argonne (ANL) and Oak Ridge (ORNL), are involved, as well as General Atomic (GA), Ceramatec and many universities. The French-CEA are working alongside GA and SNL under the I-NERI agreement (International Nuclear Energy Research Initiative). The broad division of research is described in Table 8.

5.7. Korea

The Hydrogen Energy division of the Korea Institute of Energy Research (KIER) and the Korean Atomic Energy Research Institute (KAERI) are developing both the SI cycle and HTE as possible technologies for the Nuclear Hydrogen Development and

Table 8
US DoE NHI.

Company/laboratory	Main area of research	Comments
GA Sandia CEA	SI cycle	See Section 2.1.1
INL	HTE	See Section 2.2
SRNL	HyS cycle	See Section 2.1.2
ORNL INL	Membrane applications	
ANL Many universities	Other thermochemical cycles	See Section 2.1.3

Demonstration reactor (NHDD, see Section 4.1.12). The conceptual flow diagram for HTE includes a single shaft, direct Brayton cycle operated in parallel with an indirect loop for steam production (Shin et al., 2007). Efficiencies of around 45% are expected from modelling, however, much important experimental work is yet to be done. A lab scale study of the SI cycle is in process with the aim of producing 5 l H_2/h. Experimental studies on many aspects of the cycle are being carried out (Hong et al., 2007a,b), however, no coupling strategy has yet been published.

5.8. Other national programmes

5.8.1. Italy

In 2005 the Italian ENEA (Ente per le Nuove tecnologie, l'Energia e l'Ambiente, the National Agency for New Technologies, Energy and the Environment) launched an ambitious project under their Hydrogen and Fuel Cells division named TEPSI (Tarquini, 2007). The three year project has three main strands:

1. Hydrogen production with thermochemical cycles fed by concentrated solar energy.
2. Development of new materials for hydrogen storage.
3. Zero-emission integrated hydrogen and electric power production by coal hydro-gasification.

The first strand includes research into the SI cycle, the mixed ferrites cycle and solar reactors. Although aimed at the solar production of hydrogen, much of the SI cycle research is also relevant to nuclear hydrogen production. Bench scale Bunsen reaction experiments have been carried out (Giaconia et al., 2007a), as well as investigations of the HI decomposition (Spadoni et al., 2007) and membrane distillation experiments (Caputo et al., 2007).

5.8.2. Australia

The Australian Commonwealth Scientific and Industrial Research Organisation (CSIRO) Hydrogen Technology programme is concentrated mainly on fuel cells, however, research is also being carried out on electrolysis and solar thermochemical hydrogen production. The recently published report on Australia's hydrogen economy roadmap (Australian Academy of Science, 2008) considers nuclear and hydrogen energy technologies to be only of low priority and that Australia should "monitor international development and follow as needed". In contrast, high priority is placed on advanced coal technologies and photovoltaics.

5.8.3. Germany

The German Aerospace Centre (DLR) are investing the decomposition of sulphuric acid, an important stage in the SI and HyS cycles, using a solar reactor (Noglik et al., 2007). They are also investigating other thermochemical cycles that can be operated in conjunction with solar power, however, do not consider nuclear power and coupling.

5.9. Discussion

There are four major programmes across the world to build nuclear hydrogen plants, as well as many smaller R&D support efforts. Three of the four major programmes, those of GA, PBMR/Westinghouse and AREVA NP, are vying for funding through the US DoE Next Generation Nuclear Plant (NGNP) programme. A decision on the chosen design is expected later this year. Sections from each of the three plans may be incorporated into the final design. The NGNP programme has a strong emphasis on early design and licensing and plans to have an operational plant in 2018. If unsuccessful in being chosen for major components of the NGNP, it is unclear where funding will come from for the programmes to continue. The Japanese are the only nation with a stand alone programme and are currently world leaders in nuclear hydrogen development.

The power conversion system (PCS) and the hydrogen production plant (HPP) employed vary dramatically between programmes. For the PCS, PBMR and AREVA NP have chosen the more conventional Rankine technology, whereas GA and JAEA have opted for Brayton cycles. JAEA have concentrated their R&D efforts on the SI cycle, whereas the others are also looking at high temperature electrolysis and Westinghouse have chosen the HyS cycle. Predicted efficiencies and costs are currently at a preliminary stage and are very similar, regardless of the options chosen. The technological feasibility of key components is likely to be the determining factor for which design comes out on top.

Table 9
IHX parameters.

	JAEA	HYTHEC/ RAPHAEL	AREVA NP	GA
m_P (kg/s)	324.2	209.95	240	321
$T_{In,P}$ (°C)	950	950	850	950
$P_{In,P}$ (MPa)	5.00	5.5	5.5	7.03
$T_{Out,P}$ (°C)	850	387	350	590
$P_{Out,P}$ (MPa)		5.4		7.00
m_S (kg/s)	80.3	218.89	614	321
$T_{In,S}$ (°C)	500	350	300	565
P_{InS} (MPa)	5.15	5	5.5	7.10
$T_{Out,S}$ (°C)	900	890	800	925
$P_{Out,S}$ (MPa)		4.9		7.07
Q (MWt)	170	613.3	608	600
LMTD (°C)	154	48	50	24
HEX design	Helical shell and tube	–	Plate fin/tubular/ printed circuit	Printed circuit

6. Intermediate heat exchanger

In contrast to the Power Conversion System (PCS), which can be both directly and indirectly coupled to the nuclear reactor, all flowsheets use indirect coupling between the Hydrogen Production Plant (HPP) and the reactor. This is primarily due to control and safety constraints and means that the Intermediate Heat Exchanger (IHX) is a very important piece of equipment. The IHX has to transfer several hundred MW from the primary to the secondary loop with high efficiency, operate at high temperature and be compact enough to be enclosed in a single vessel. It must also prevent water and process gas ingress into the nuclear core and minimise hydrogen and tritium permeation between the primary and secondary loops. There is currently no industrial experience with the size and operating conditions required. The temperature and environmental conditions (e.g. the presence of impurities in the helium which may cause oxidation reactions and carbonisation) means that materials other than those commonly used in heat exchangers are required.

Helium is the heat transfer fluid on both sides of the IHX, with the inlet temperature on the primary loop being about 950 °C. The inlet temperature on the secondary side depends on the configuration employed. Table 9 shows the parameters chosen by several leading nuclear hydrogen programmes, following the notation given in Fig. 20. The data for the PBMR/Westinghouse design was not available.

As shown in Table 9, there are several different types of heat exchanger being considered for the IHX. Before a selection is made, all aspects must be considered, including materials, design, fabrication, testing, safety and control. For most cases, the small LMTD across the IHX means that a large heat transfer area is required, and therefore a HEX of compact surface geometry, such as a plate type, is

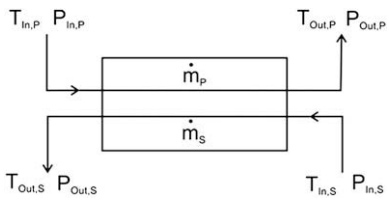

Fig. 20. Schematic of the intermediate heat exchanger.

the only economically viable option. Due to the competitive nature of the stage the research is currently at, most vendors have not disclosed specific design information. The following sections describe the IHX designs of selected nuclear hydrogen programmes.

6.1. JAEA

The Japanese design is unique in comparison to the others as it has a significantly higher LMTD due to the high, narrow temperature range employed on the primary side (Kunitomi et al., 2007). This is possible due to the particular location of the IHX. JAEA have selected a helical shell and tube construction for the GTHTR300C. Hastelloy XR is used for the heat transfer tubes and tube bundles. Hastelloy XR is a nickel-based superalloy developed by JAEA and Mitsubishi Materials Co. and is approved for high temperature applications (Sakaba et al., 2006). The design of the GTHTR300C-IHX is similar to that used in the HTTR, the main difference being the size and the pressures used. A small pressure difference between the primary and secondary sides of only 0.15 MPa is used to avoid creep of the heat transfer tube. The small pressure difference is required as the creep strength is low at the high temperatures involved, and is controlled using a differential pressure control system. After experiments on, and comparison with, the HTTR-IHX, a lifetime of 20 years is assured for the GTHTR300C-IHX.

6.2. European programmes

The IHX is a common element in the HYTHEC and RAPHAEL projects. Information from RAPHAEL about the sizing of the IHX was fed into the HYTHEC project which designed the coupling strategy. As a main partner in both RAPHAEL and the I-NERI contract, AREVA NP are carrying out significant research on the IHX. The IHX is the only component of the ANTARES design which does not use conventional and well-proven technology. One of the key areas of the research is materials development. Two nickel-based alloys, alloy 617 and alloy 230, were selected for investigation of mechanical properties, ageing, environmental effects and fabricability (Billot et al., 2006). A decision is expected this year as to which material is most suitable.

The helical tubular concept, inherited from past German developments where a 10 MW HEX was built (Maus et al., 1984), is being studied and developed so a more modern, compact version can be assessed. The design is thought to be feasible based on previous experience (INL, 2006). In parallel to the work on the tubular design, and taking advantage of the significant improvements to plate exchangers over the last 20 years, several plate type designs which have the potential to be more compact are also being investigated. Both printed circuit and plate fin designs are being explored. The different designs were scheduled to be tested in 2007 in the HEFUS 3 helium loop at ENEA that provides representative fluid dynamics and conditions, although no results have yet been published. The homogeneity of flow distribution will be tested in the large flowrate loop PAT at EDF this year, and the CLAIRE loop at CEA will be used to test the thermo-mechanical performance of the designs. After the preliminary testing is complete, the HELITE loop at CEA Caderache will be used to validate and optimise the selected design (Billot et al., 2006).

The IHX will be housed inside a containment vessel, and so is itself not the primary pressure boundary. The containment vessel is at a much lower temperature, and so can be built from GR91 steel. A safety valve will be required between the secondary side of the IHX and the HPP.

6.3. GA

The GA IHX design is based on the Printed Circuit Heat Exchanger (PCHE) concept developed by Heatric corporation (Richards et al., 2006a). It consists of metal plates that are diffusion bonded to restore the properties of the base metal. A technique that is similar to that used for etching printed electric circuits is used to chemically mill fluid flow channels into the plates. The design consists of 40 Heatric-type modules, manufactured from a high temperature Ni-based superalloy. Candidate materials are Inconel 617 and Hastelloy XR. The IHX vessel is manufactured from SA533 steel and insulated with Kaowool to maintain operating temperatures below 350 °C and prevent creep damage.

6.4. PBMR/Westinghouse

The PBMR design for electricity production utilises a direct Brayton cycle and therefore eliminates the use for an IHX. However, for hydrogen production, an indirect, series PCS and HPP are used, so an IHX is required. Westinghouse are responsible for the development of the IHX and have conducted materials research as well as design evaluations.

Inconel 617 and Hayness 230, both Nickel-based superalloys that can be used up to around 1000 °C, are candidate materials (Fazluddin et al., 2004). However, the design qualification with respect to environmental effects and deformation mechanisms is not mature, and substantial experimental work and modelling is still required. Mo-TZM is being considered as an alternative material as it has significant high temperature strength, and is well capable of withstanding operational conditions up to at least 1200 °C. It does, however, form a brittle carburised layer in carburising atmospheres and costs three times more than the Ni-based alloys.

The Westinghouse design employs two stages of heat exchangers (INL, 2007). The first operates at temperatures between 710 and 900 °C and is expected to be replaceable. The second operates at temperatures below 710 °C and is expected to have a 60-year lifetime. The high temperature IHX could be either metal or ceramic, whereas the low temperature one would be metal. As the heat transfer area required is large both heat exchangers are of the compact design and a printed circuit (PCHE) design has been selected.

6.5. Discussion

The IHX presents an engineering challenge due to the high temperatures, large heat transfer areas and small available space involved. Metallic heat exchangers are being used by all the programmes and Ni-based super alloys are being developed and investigated as they represent the most cost effective materials able to operate at the high temperatures required. All the programmes, with the exception of the Japanese, have selected to use compact heat exchangers, mainly of the printed circuit design although fin plate designs are still being considered. Due to the lower heat transfer area required, the Japanese are using the larger but more conventional and well-proven tubular design. Further high

temperature testing is required before any IHX design is finalised and ready for coupling to a VHTR.

7. Safety

Safety is very important in all industrial plants, however, is particularly important when nuclear technology is involved. Past incidents, such as Chernobyl and Three Mile Island, left the public sceptical about nuclear power. New Generation IV nuclear plants therefore have a strong emphasis on inherent safety features. Hydrogen is a highly explosive gas, so the coupling of a hydrogen production plant to a nuclear reactor presents even more safety considerations. The main areas of concern and development are detailed in the following sections.

7.1. VHTR

All the VHTRs described in this report use TRISO (tristructural-isotropic) fuel particles. The particles consist of a fuel kernel composed of uranium oxides, coated with four layers of three isotropic materials (Matzner and Wallace, 2005). The innermost layer is porous carbon, which allows the fission products to collect without creating internal pressure. The second layer is dense pyrolytic carbon (PyC), which is followed by a layer of SiC to retain fission products at elevated temperatures. The final layer is also dense PyC. The outer layers create a compound barrier against fission product release, effectively providing each kernel with its own miniature pressure vessel, and so are fundamental to exceptional safety. The TRISO particles are designed not to crack due to stresses for temperatures up to 1600 °C. It is therefore important that reactors are designed with this in mind. The safety features of the TRISO fuel were demonstrated over extended time periods in the early German AVR and THTR reactors. In prismatic design reactors, such as the GT-MHR, ANTARES and JAEA designs, the TRISO fuel particles are imbedded in graphite blocks, whereas in pebble bed design, such as the PBMR and Chinese designs, the TRISO particles are embedded in graphite spheres.

Both the GT-MHR and GTHTR300 achieve passive safety by designing for a core cool-down that limits the peak fuel temperature to 1600 °C (INL, 2006; Kunitomi et al., 2007). Under normal operating conditions, the control rods are employed to stop the reactor. In case of failure of the control rods, a backup system is also in place. Decay heat is conducted radially through the core and pressure vessel and then radiated to passive air-cooled panels in the reactor cavity building. The air-cooled panels also eliminate the need for high temperature concrete. Direct core cooling is not necessary in any accident due to the inherent safety characteristics of the high thermal capacity of the core and the strong negative coefficient of reactivity. Under any postulated depressurisation accident the TRISO fuel particles will retain the fission products.

In Pebble bed reactors, the fuel pebbles are located in an annular cavity in the reactor vessel. They are dropped from several points above the core annulus and proceed vertically downwards until they are removed at the bottom. This online refuelling makes reactor shut-downs unnecessary and allows the reactor to operate with no excess reactivity. The graphite core of the reactor provides a high heat capacity and slow thermal response. The reactor has a negative coefficient of reactivity, which inherently shuts down the core when the temperature exceeds normal operating conditions. Passive heat decay is provided in the same way as the prismatic reactors, through conduction and radiation to the cavity cooling system, which has a capacity to absorb the heat for more than 72 h (Koster et al., 2003).

7.2. Hydrogen production plant

The hydrogen production plant (HPP) is designed and operated based on existing non-nuclear industrial standards which are applied to conventional chemical plants. The HPP is not expected as the reactor core cooling system. In the case of abrupt thermal load change of the HPP due to malfunction, precautions must be in place to ensure this does not affect the reactor. In the JAEA design, three control valves in the primary helium circuit are used to mitigate the turbulence of the inlet helium temperature to the gas turbine (Kunitomi et al., 2007). In the HTTR-IS design, a steam generator is placed downstream of the HPP in the secondary circuit to act as a thermal absorber and mitigate any temperature fluctuations to within 10 °C (Inagaki et al., 2007). A temperature rise of 15 °C or greater would cause the reactor to scram. In the HYTHEC flowsheet a bypass emergency cooler is included as a heat sink (de Lorenzo et al., 2006).

Chemical plant hazards, such as chemical toxicity and corrosivity, are also important in the HPP and conventional chemical plant design standards are applied. Leakage and spillage are the most typical causes for the occurrence of fire after component failure. The basic principles to avoid them are sound operating procedures and regular maintenance schedules. Explosive atmospheres should be prevented and ignition sources excluded. A Failure Mode Effects and Criticality Analysis (FMECA) has been carried out on the H_2SO_4 and HI_x processing section of the SI cycle (de Lorenzo et al., 2006).

7.3. Tritium and hydrogen migration

Hydrogen and its isotopes, deuterium and tritium, can permeate through solid metal. Tritium is radioactive and is produced in the reactor core in several ways: as a ternary fission product, by activation reaction of lithium and boron in graphite components, and He-3 fractions of the He coolant. A small amount of the tritium produced tends to permeate through the IHX to the secondary helium loop and the HPP. Furthermore, it is probable that it will mix with the product hydrogen. In the same way that tritium can permeate from the reactor to the HPP, hydrogen can permeate in the opposite direction.

As part of the HYTHEC project, preliminary calculations were carried out to estimate the amount of tritium permeation (de Lorenzo et al., 2006). In contrast to normal operating conditions, the leakage requires a pressure drop between the primary and secondary loops of the IHX. The secondary loop is purposefully operated at a pressure above that of the primary loop to avoid this happening. A total tritium release into the primary helium stream was calculated to be 6.43×10^{-5} Ci/s, leading to a tritium contamination of the hydrogen of 4.066×10^{-2} Ci/tonne H_2. This value is significantly lower than allowed maximum limits, however, is based on many assumptions and not experimental values.

The Japanese have carried out testing on various metals including Hastelloy XR, the material used for the tubes of the IHX, to investigate the permeability of hydrogen isotopes (Masui et al., 1979; Takeda et al., 2004; Sakaba et al., 2006). Permeability values were obtained for hydrogen, deuterium and tritium. The permeation rate depends on the hydrogen partial pressure and the surface condition of the metal. The amount of tritium permeation through the reaction tube is expected to be reduced by counter-permeation of tritium and hydrogen. A helium purification system is included on the primary helium loop to reduce the quantity of impurities such as hydrogen. R&D is planned with the aim to reduce permeation through the IHX tubes by controlling the formation of an oxidised film layer by adjusting the coolant chemistry.

7.4. Explosion

The explosion of a combustible gas such as hydrogen is a very severe problem for reactor safety. The overpressure caused by a blast can damage safety related components. The simplest counter measure is to have a long distance between the reactor and the HPP, however, this leads to an increase in construction costs of the piping and a drop in helium temperature and so lower efficiency. Other countermeasures, such as reducing the leak of combustible gases and mitigating overpressures caused with barriers should be considered. The placement of the reactor underground aids this. The rupture of gas pipes was found to be the main cause of combustible gas leaks (Inagaki et al., 2007). Double walled tubes with an inert gas, such as nitrogen, in the cavity are being designed and tested with a view to protection from leakage, therefore enabling the HPP to be housed close to the reactor.

7.5. Isolation valves

Isolation valves are a key safety component when coupling a nuclear reactor to a hydrogen production plant. In the case of a pipe rupture, it is essential to isolate the primary loop to prevent the release of helium contaminated by fission products. As the IHX is designed to have a pressure gradient across it, if depressurisation occurs in the secondary loop, tube breakage is likely to occur. The amount of primary coolant released will depend on the number of failed tubes/components and the shut off time of the isolation valve. Calculations suggest that the shut off time must be less than 10 s (Yasuno et al., 1980).

Two isolation valves are placed in the primary helium loop of the Japanese design, one to prevent radioactive material release from the reactor to the HPP and the other to prevent ingress of combustible gases from the HPP or IHX to the reactor (Inagaki et al., 2007). These valves must operate at very high temperatures. JAEA have been conducting design and testing work on an angle valve, focussing on minimising helium leakage and the prevention of deformation of the valve seat (Nishihara et al., 2004). The structural integrity of a new coating material was confirmed. Further work is being carried out to investigate the durability.

Some testing of valves has also been carried out at PBMR, however, only up to 350 °C (Matzner, 2004). Further testing at higher temperatures is planned. One of the work packages in the RAPHAEL project, WP-CT1, is dedicated to heat exchangers, valves and vessels (Besson et al., 2006). A design study will be carried out based on past experience in Germany as well as on current technologies, for example the AGR.

7.6. Licensing

Licensing of the nuclear plants is very important and will only be carried out when stringent safety criteria are set and followed. The above sections have laid out some of the primary concerns which need to be addressed before a nuclear hydrogen plant becomes operational.

8. Conclusions

Nuclear hydrogen production has the potential to provide a carbon neutral energy solution for the future. Very High Temperature Reactors (VHTRs) can be coupled to a hydrogen production plant (HPP) utilising either high temperature electrolysis (HTE), the Sulphur Iodine (SI) thermochemical cycle or the hybrid sulphur (HyS) cycle.

There are currently two small-scale, operational VHTRs in the world, with five more, of a much larger scale, in development. These are the PBMR in South Africa, ANTARES in France, the GT-MHR in the US, the HTR-PM in China and the GTHTR300 in Japan. All five are currently in the design and component testing stage, and aim to be operational around 2020. The VHTR is a Generation IV reactor which incorporates many inherent safety features. The US DoE Next Generation Nuclear Plant (NGNP) is a government funded programme aiming to produce an operational VHTR. It is currently in the process of selecting the best design from those put forward by GA (the GT-MHR), PBMR/Westinghouse and AREVA NP (ANTARES). There are also many small research programmes investigating particular components and features of the VHTR.

With the exception of the Chinese, all the countries with active R&D on VHTRs also have a nuclear hydrogen programme. As the only institution with both a working HTGR and nuclear hydrogen research, the Japan Atomic Energy Agency (JAEA) are world leaders in the field and have the most all-encompassing research programme. Significant research is being carried out into high temperature electrolysis, and both the SI and HyS thermochemical cycles. As well as the major nuclear programmes, there are also many other research centres investigating these processes.

There are four key components of a nuclear hydrogen plant: the reactor, the hydrogen production plant (HPP), the power conversion system (PCS) and the intermediate heat exchanger (IHX). The coupling between these components is also very important. The PCS and HPP employed vary dramatically between programmes. For the PCS both direct and indirect coupling are possible and either a Rankine steam cycle or a Brayton gas turbine cycle can be used. PBMR and AREVA NP have chosen the more conventional Rankine technology, whereas GA and JAEA have opted for Brayton cycles. PBMR are also developing Brayton cycle technology and plan to use it in the future. JAEA have concentrated their R&D efforts on the SI cycle, whereas the others are also looking at high temperature electrolysis and Westinghouse have chosen the HyS cycle. All current designs involve indirect coupling of the HPP to the reactor via an IHX. Materials of construction for the IHX, as well as other components, present an engineering challenge due to the high temperatures involved and much R&D is centred on developing new alloys.

Predicted process efficiencies and plant costs are currently at a preliminary stage and are very similar, regardless of the options chosen. The cost of hydrogen produced from water splitting using nuclear technologies is around \$2/kg H_2. The technological feasibility and testing of key components will be one of the determining factors in plant viability.

Acknowledgements

This report has been produced under the EPSRC's "Keeping the Nuclear Option Open" programme whose support is gratefully acknowledged.

References

Australian Academy of Science, 2008. Towards development of an Australian scientific roadmap for the hydrogen economy.

Bamberger, C.E., 1978. Hydrogen production from water by thermochemical cycles: a 1977 update. Cryogenics 18, 170–183.

Bamberger, C.E., Richardson, D.M., 1976. Hydrogen production from water by thermochemical cycles. Cryogenics 16, 197–208.

Barbier, D., Bertrand, F., Haubensack, D., Aujollet, P., Alpy, N., 2006. Massive H2 production (I/S cycle) with VHTR heating: preliminary designs & safety approach for coupling. In: HTR2006: 3rd International Topical Meeting on High Temperature Reactor Technology, Johannesburg, South Africa.

Beghi, G.E., 1986. A decade of research on thermochemical hydrogen at the Joint Research Centre, ISPRA. International Journal of Hydrogen Energy 11, 761–771.

Besson, D., Breuil, E., Verrier, D., Briottet, L., Tochon, P., Buckthorpe, D., Casalta, S., Chauvet, V., Cucini, D., von Lensa, W., Falcand, C., Gronek, M., Worlitz, F., 2006. RAPHAEL IP project high and very high temperature component developments. In: HTR2006: 3rd International Topical Meeting on High Temperature Reactor Technology, Johannesburg, South Africa.

Billot, P., Hittner, D., Vasseur, P., 2006. Outlines of the French R&D Programme for the development of high and very high temperature reactors. In: HTR2006: 3rd International Topical Meeting on High Temperature Reactor Technology, Johannesburg, South Africa.

Bramblett, G.C., Fisher, C.R., Swart, F.E., 1980. Operational experience at Fort St Vrain. Specialists Meeting on Gas-cooled Reactor Safety and Licensing Aspects. Lausanne, Switzerland.

Brecher, L., Spewock, S., Warde, C., 1977. The Westinghouse sulphur cycle for the thermochemical decomposition of water. International Journal of Hydrogen Energy 2, 7–15.

Breitenfelder, R., Wachholz, W., Weicht, U., 1980. Accident analysis and accident control. Specialists Meeting on Gas-cooled Reactor Safety and Licensing Aspects, Lausanne, Switzerland.

Brown, L.C., 2007. Evolution of the sulfur–iodine flowsheet, 1977–2007. AIChE Annual Meeting. Salt Lake City, USA.

Caputo, G., Felici, C., Tarquini, P., Giaconia, A., Sau, S., 2007. Membrane distillation of HI/H_2O and H_2SO_4/H_2O mixtures for the sulfur–iodine thermochemical process. International Journal of Hydrogen Energy 32, 4736–4743.

Chang, J., Kim, Y.W., Lee, K.Y., Lee, Y.W., Lee, W.J., Noh, J.M., Kim, M.H., Lim, H.S., Shin, Y.J., Bae, K.K., Jung, K.D., 2007. A study of a nuclear hydrogen production demonstration plant. Nuclear Engineering and Technology 39, 111–122.

Colak, U., Brey, L., Methnani, M., 2006. Status of the IAEA coordinated research project on HTGR core physics and thermal hydraulics benchmarks (CRP-5). In: HTR2006: 3rd International Topical Meeting on High Temperature Reactor Technology, Johannesburg, South Africa.

Correia, M., Greyvenstein, R., Silady, F., Penfield, S., 2006. PBMR as an Ideal Heat Source for High-temperature Process Heat Applications. Miami, FL, United States. American Society of Mechanical Engineers, New York, NY 10016-5990, United States.

Crabtree, G.W., Dresselhaus, M.S., Buchanan, M.V., 2004. The hydrogen economy. Physics Today 57, 39–44.

De Beni, G., 1982. Thermochemical processes for hydrogen production by water splitting: from theory to practice. Journal of the Electrochemical Society 129, 67–72.

de Lorenzo, D., Cedillo, J., Borgard, J., Corgnale, C., 2006. HYTHEC D6: I–S Cycle – VHTR reactor coupling with energy recovery. First Safety Assessment. FP6-HYTHEC-D6.

Doizi, D., Dauvois, V., Roujou, J.L., Delanne, V., Fauvet, P., Larousse, B., Hercher, O., Carles, P., Moulin, C., Hartmann, J.M., 2007. Total and partial pressure measurements for the sulphur–iodine thermochemical cycle. International Journal of Hydrogen Energy 32, 1183–1191.

Dostal, V., Driscoll, M.J., Hejzlar, P., 2004. A supercritical carbon dioxide cycle for next generation nuclear reactors. MIT-ANP-TR-100.

Engels, H., Funk, J.E., Hesselmann, K., Knoche, K., 1987. Thermochemical hydrogen production. International Journal of Hydrogen Energy 5, 291–295.

Ewan, B., Graf, D., Monnerie, N., Sattler, C., Le Naour, F., Stein, W., Hinkley, J., 2007. INNOHYP CA final report. INNOHYP CA-FR-CEA/07-05.

Ewan, B.C., Allen, R.W.K., 2005a. A figure of merit assessment of the routes to hydrogen. International Journal of Hydrogen Energy 30, 809–819.

Ewan, B.C.R., Allen, R.W.K., 2005b. A representation of limiting efficiencies for thermochemical cycles. AIChE Annual Meeting, Cincinnati, USA.

Eyre, N., Fergusson, M., 2002. Fuelling road transport – implications for energy policy (Online). Available from: http://www.dft.gov.uk (cited April 2007).

Fazluddin, S., Smit, K., Slabber, J., 2004. The use of advanced materials in VHTRs. HTR:2004 2nd International Meeting on High Temperature Reactor Technology, Beijing, China.

Forsberg, C.W., 2007. Future hydrogen markets for large-scale hydrogen production systems. International Journal of Hydrogen Energy 32, 431–439.

Frohling, W., Unger, H., Dong, Y., 2002. Thermodynamic assessment of plant efficiencies for HTR power conversion systems. In: HTR2002: 1st International Topical Meeting on HTR Technology, Petten, The Netherlands.

Fujikawa, S., Hayashi, H., Nakazawa, T., Kawasaki, K., Iyoku, T., Nakagawa, S., Sakaba, N., 2004. Achievement of reactor-outlet coolant temperature of 950 °C in HTTR. Journal of Nuclear Science and Technology 41, 1245–1254.

Fujiwara, S., Kasai, S., Yamauchi, H., Yamada, K., Makino, S., Matsunaga, K., Yoshino, M., Kameda, T., Ogawa, T., Momma, S., Hoashi, E., 2008. Hydrogen production by high temperature electrolysis with nuclear reactor. Progress in Nuclear Energy 50, 422–426.

Funk, J., Reinstrom, R., 1966. Energy requirements in the production of hydrogen from water. Industrial and Engineering Chemistry Process Design and Development 5, 336–342.

Funk, J.E., 2001. Thermochemical hydrogen production: past and present. International Journal of Hydrogen Energy 26, 185–190.

Giaconia, A., Caputo, G., Ceroli, A., Diamanti, M., Barbarossa, V., Tarquini, P., Sau, S., 2007a. Experimental study of two phase separation in the Bunsen section of the sulfur–iodine thermochemical cycle. International Journal of Hydrogen Energy 32, 531–536.

Giaconia, A., Grena, R., Lanchi, M., Liberatore, R., Tarquini, P., 2007b. Hydrogen/methanol production by sulfur–iodine thermochemical cycle powered by combined solar/fossil energy. International Journal of Hydrogen Energy 32, 469–481.

Glatzmaier, G.C., Blake, D.M., 1998. Analysis of Hydrogen Production Methods Using Electrolysis and Concentrated Solar Energy. Albuquerque, NM, USA. ASME, Fairfield, NJ, USA.

Goldstein, S., Borgard, J.M., Vitart, X., 2005. Upper bound and best estimate of the efficiency of the iodine sulphur cycle. International Journal of Hydrogen Energy 30, 619–626.

Gorensek, M.B., Summers, W.A., Buckner, M.R., Qureshi, Z.H., 2005. Conceptual Design and Projected Performance for a Hybrid Sulfur Process. Cincinnati, OH, United States. American Institute of Chemical Engineers, New York, United States.

Greyvenstein, G.P., Rousseau, P.G., 2003. Design of a physical model of the PBMR with the aid of Flownet. Nuclear Engineering and Design 222, 203–213.

Greyvenstein, R., Correia, M., Kriel, W., 2006. South Africa's opportunity to maximise the role of nuclear power in a global hydrogen economy. 3rd International Topical Meeting on High Temperature Reactor Technology: HTR2006. Johannesburg, South Africa.

Guojun, Y., Yang, X., Zhengang, S., Huidong, G., 2007. Characteristic analysis of rotor dynamics and experiments of active magnetic bearing for HTR-10GT. Nuclear Engineering and Design 237, 1363–1371.

Hammerschlag, R., Mazza, P., 2005. Questioning hydrogen. Energy Policy 33, 2039–2043.

Hawkes, G.L., O'Brien, J.E., Stoots, C.M., Hawkes, B., 2007. 3D CFD model of a multi-cell high temperature electrolysis stack. AIChE Annual Meeting 2007, Salt Lake City, USA.

Hejzlar, P., Pope, M.J., Williams, W.C., Driscoll, M.J., 2005. Gas cooled fast reactor for Generation IV service. Progress in Nuclear Energy 47, 271–282.

Herranz, L., Linares, J., Moratilla, B., 2007. Assessment of regenerative reheating in direct brayton power cycles for high-temperature gas-cooled reactors. Nuclear Technology 159, 15–24.

Herranz, L., Linares, J., Moratilla, B., Lopez, R., 2006. Thermal assessment and second law analysis of indirect brayton power cycle for high-temperature gas-cooled nuclear reactors. In: HTR2006: 3rd International Topical Meeting on High Temperature Reactor Technology, Johannesburg, South Africa.

Herring, J., Stoots, C., O'Brien, J., Hartvigsen, J., Housley, G., 2007a. Recent progress in high temperature electrolysis. AIChE Annual Meeting 2007, Salt Lake City, USA.

Herring, J.S., O'Brien, J.E., Stoots, C.M., Hawkes, G.L., Hartvigsen, J.J., Shahnam, M., 2007b. Progress in high-temperature electrolysis for hydrogen production using planar SOFC technology. International Journal of Hydrogen Energy 32, 440–450.

Hino, R., Haga, K., Aita, H., Sekita, K., 2004. 38. R&D on hydrogen production by high-temperature electrolysis of steam. Nuclear Engineering and Design 233, 363–375.

Hittner, D., Bogusch, E., Besson, D., Buckthorpe, D., Chauvet, V., Futterer, M.A., van Heek, A., von Lensa, W., Phelip, M., Pirson, J., Scheuermann, W., Verrier, D., 2006. RAPHAEL, a European project for the development of HTR/VHTR technology for industrial process heat supply and cogeneration. In: HTR2006: 3rd International Topical Meeting on High Temperature Reactor Technology, Johannesburg, South Africa.

Hong, S.-D., Kim, B.-K., Bae, K.-K., Choi, H.S., Hwang, G.J., 2007a. Evaluation of the membrane properties with changing iodine molar ratio in HI_x ($HI–I_2–H_2O$ mixture) solution to concentrate HI by electro-electrodialysis. Journal of Membrane Science 291, 106–110.

Hong, S.-D., Kim, J.-K., Kim, B.-K., Choi, S.-I., Bae, K.-K., Hwang, G.-J., 2007b. Evaluation on the electro-electrodialysis to concentrate HI from HI_x solution by using two types of the electrode. International Journal of Hydrogen Energy 32, 2005–2009.

Hu, S., Liang, X., Wei, L., 2006. Commissioning and operation experience and safety experiments on HTR-10. In: HTR2006: 3rd International Topical Meeting on High Temperature Reactor Technology, Johannesburg, South Africa.

Hwang, G., Onuki, K., Nomura, M., Kasahara, S., Kim, J., 2003. Improvement of the Thermochemical water-splitting IS (iodine–sulfur) process by electro-electrodialysis. Journal of Membrane Science 220, 129–136.

IAEA, 1999. Hydrogen as an energy carrier and its production by nuclear power. IAEA-TECDOC-1085.

IAEA, 2003. Evaluation of high temperature gas cooled reactor performance: benchmark analysis related to initial testing of the HTTR and HTR-10. IAEA-TECDOC-1382.

IEA, 2007. Key World Energy Statistics 2007.

Inaba, Y., Ohashi, H., Nishihara, T., Sato, H., Inagaki, Y., Takeda, T., Hayashi, K., Takada, S., 2005. Study on control characteristics for HTTR hydrogen production system with mock-up test facility: system controllability test for fluctuation of chemical reaction. Nuclear Engineering and Design 235, 111–121.

Inagaki, Y., Ohashi, H., Inaba, Y., Sato, H., Nishihara, T., Takeda, T., Hayashi, K., Ogawa, M., 2007. Research and development on system integration technology for connection of hydrogen production systems to an HTGR. Nuclear Technology 157, 111–119.

INL, 2006. Next generation nuclear plant materials research and development program plan. INL/EXT-06-11701.

INL, 2007. Next generation nuclear plant pre-conceptual design report. INL/EXT-07-12967.

IPCC, 2007. Climate Change 2007 – The Physical Science Basis. Cambridge University Press.

Jeong, Y.H., Hohnholt, K.J., Yildiz, B., Kazimi, M.S., 2005. Optimization of the hybrid sulfur cycle for hydrogen generation. ICAPP '05. Seoul, Korea.

Kameyama, H., Yoshida, K., 1978. Test of one-loop flow scheme for the UT-3 thermochemical hydrogen production process. 2nd World Hydrogen Energy Conference, Zurich, Switzerland.

Kodama, T., Gokon, N., 2007. Thermochemical cycles for high-temperature solar hydrogen production. Chemical Reviews 107, 4048–4077.

Koster, A., Matzner, H.D., Nicholsi, D.R., 2003. PBMR design for the future. Nuclear Engineering and Design 222, 231–245.

Kreith, F., West, R.E., 2004. Fallacies of a hydrogen economy: a critical analysis of hydrogen production and utilization. Journal of Energy Resources Technology Transactions of the ASME 126, 249–256.
Kruger, P., 2001. Electric power requirement for large-scale production of hydrogen fuel for the world vehicle fleet. International Journal of Hydrogen Energy 26, 1137–1147.
Kubo, S., Kasahara, S., Okuda, H., Terada, A., Tanaka, N., Inaba, Y., Ohashi, H., Inagaki, Y., Onuki, K., Hino, R., 2004a. A pilot test plan of the thermochemical water-splitting iodine–sulfur process. Nuclear Engineering and Design 233, 355–362.
Kubo, S., Nakajima, H., Kasahara, S., Higashi, S., Masaki, T., Abe, H., Onuki, K., 2004b. A demonstration study on a closed-cycle hydrogen production by the thermochemical water-splitting iodine–sulfur process. Nuclear Engineering and Design 233, 347–354.
Kuijper, J.C., Raepsaet, X., De Haas, J.B.M., Von Lensa, W., Ohlig, U., Ruetten, H.J., Brockmann, H., Damian, F., Dolci, F., Bernnat, W., Oppe, J., Kloosterman, J.L., Cerullo, N., Lomonaco, G., Negrini, A., Magill, J., Seiler, R., 2006. HTGR reactor physics and fuel cycle studies. Nuclear Engineering and Design 236, 615–634.
Kunitomi, K., Katanishi, S., Takada, S., Takizuka, T., Yan, X., 2004. Japan's future HTR – the GTHTR300. Nuclear Engineering and Design 233, 309–327.
Kunitomi, K., Yan, X., Nishihara, T., Sakaba, N., Mouri, T., 2007. JAEA's VHTR for hydrogen and electricity cogeneration: GTHTR300C. Nuclear Engineering and Technology 39, 9–20.
LaBar, M.P., Shenoy, A.S., Simon, W.A., Campbell, E.M., 2004. The gas-turbine modular helium reactor. Nuclear Energy 43, 165–175.
Lahoda, E.J., McLaughlin, D.F., Mulik, R., Kriel, W., Kuhr, R., Bolthrunis, C., Corbett, M., 2006. Estimated costs for the improved HyS flowsheet. 3rd International Topical Meeting on High Temperature Reactor Technology: HTR2006, Johannesburg, South Africa.
Larminie, J., Dicks, A., 2003. Fuel Cell Systems Explained. Wiley.
Le Duigou, A., Borgard, J.M., Larousse, B., Doizi, D., Allen, R.W.K., Ewan, B.C., Priestman, G.H., Elder, R.H., Devonshire, R., Ramos Sanchez, V., Cerri, G., Salvini, C., Giovannelli, A., De Maria, G., Corgnale, C., Brutti, S., Roeb, M., Noglik, A., Rietbrock, P., Mohr, S., de Oliveira, L., Monnerie, N., Schmitz, M., Sattler, C., Orden Martinez, A., de Lorenzo Manzano, D., Cedillo Rojas, J., Dechelotte, S., Baudouin, O., 2007. HYTHEC: An EC funded search for a long term massive hydrogen production route using solar and nuclear technologies. International Journal of Hydrogen Energy 32, 1516–1529.
Lemort, F., Lafon, C., Dedryvere, R., Gonbeau, D., 2006. Physicochemical and thermodynamic investigation of the UT-3 hydrogen production cycle: a new technological assessment. International Journal of Hydrogen Energy 31, 906–918.
Lewis, M., Masin, J., 2005. An Assessment of the Efficiency of the Hybrid Copper-Chloride Thermochemical Cycle. Cincinnati, OH, United States. American Institute of Chemical Engineers, New York, United States.
Masui, K., Yoshida, H., Watanabe, R., 1979. Hydrogen permeation through iron, nickel, and heat resisting alloys at elevated temperatures. Transactions of the Iron and Steel Institute of Japan 19, 547–552.
Mathias, P., Brown, L.C., 2003. Thermodynamics of the sulfur–iodine cycle for thermochemical hydrogen production. 68th Annual Meeting of the Society of Chemical Engineers, Japan.
Matzner, D., 2004. PBMR existing and future R&D test facilities. In: HTR2004: 2nd International Topical Meeting on High Temperature Reactor Technology, Beijing, China.
Matzner, D., Kriel, W., Correia, M., Greyvenstein, R., 2006. Cycle Configurations for a PBMR Steam and Electricity Production Plant. Reno, NV, United States. American Nuclear Society, La Grange Park, IL 60526, United States.
Matzner, D., Wallace, E., 2005. The PBMR's progress. Nuclear Engineering International 50, 17–21.
Maus, W., Mendte, K., Teubner, H., 1984. The He/He heat exchanger – design and semitechnical testing. Nuclear Engineering and Design 78, 195–214.
Mawdsley, J., Carter, J., Yildiz, B., Call, A., Kropf, A., Ferrandon, M., Myers, D., Maroni, V., 2007. Post-test evaluation of the oxygen electrode from a solid oxide electrolysis stack and electrode materials development. AIChE Annual Meeting 2007, Salt Lake City.
McLaughlin, D.F., Paletta, S.A., Lahoda, E.J., Kriel, W., Nigra, M.M., McLaughlin, G.T., 2005. Hydrogen costs for the PBMR thermal reactor and the westinghouse process. AIChE Annual Meeting 2005. Cincinnati, OH, United States, American Institute of Chemical Engineers, New York, NY 10016-5991, United States.
Nakagawa, S., Tachibana, Y., Takamatsu, K., Ueta, S., Hanawa, S., 2004. Performance test of HTTR. Nuclear Engineering and Design 233, 291–300.
Nishihara, T., Sakaki, A., Inagaki, Y., Takami, K., 2004. Development of high temperature isolation valve for the HTTR hydrogen production system. Transactions of the Atomic Energy Society of Japan 3, 381–387.
Noglik, A., Roeb, M., Rzepczyk, T., Sattler, C., Pitz-Paal, R., 2007. Solar Thermochemical Generation of Hydrogen: Development of a Receiver Reactor for the Decomposition of Sulfuric Acid. Long Beach, CA, United States. American Society of Mechanical Engineers, New York, NY 10016-5990, United States.
Norman, J.H., Besenbruch, G.E., Brown, L.C., O'Keefe, D.R., Allen, C.L., 1982. Thermochemical water splitting cycle, bench-scale investigations and process engineering.
O'Brien, J.E., McKellar, M., Stoots, C.M., Herring, J.S., Hawkes, G.L., 2007a. Parametric study of large-scale production of syngas via high temperature co-electrolysis. AIChE Annual Meeting 2007, Salt Lake City, USA.
O'Brien, J.E., Stoots, C.M., Herring, J.S., Hartvigsen, J.J., 2007b. Performance of planar high-temperature electrolysis stacks for hydrogen production from nuclear energy. Nuclear Technology 158, 118–131.
Ogawa, M., Nishihara, T., 2004. Present status of energy in Japan and HTTR project. Nuclear Engineering and Design 233, 5–10.
Oh, C.H., Moore, R.L., 2005. Brayton cycle for high-temperature gas-cooled reactors. Nuclear Technology 149, 324–336.
Ohashi, H., Inaba, Y., Nishihara, T., Inagaki, Y., Takeda, T., Hayashi, K., Katanishi, S., Takada, S., Ogawa, M., Shiozawa, S., 2004. Performance test results of mock-up test facility of HTTR hydrogen production system. Journal of Nuclear Science and Technology 41, 385–392.
Pickard, P., Gelbard, F., Moore, B., Vernon, M., Parma, E., Besenbruch, G., Russ, B., Buckingham, R., Brown, L., 2007. II.J.1 Sulfur iodine thermochemical cycle. DOE Hydrogen Program FY2007 Annual Progress Report.
Ponomarev-Stepnoi, N.N., Kukharkin, N.E., Bobrov, A.A., Chuniaev, E.I., Garin, V.P., Glushkov, E.S., Kompaniets, G.V., Krutov, A.M., Lobyntsev, V.A., Polyakov, D.N., Smirnov, O.N., Zimin, A.A., 2003. Experiments on HTR criticality parameters at the ASTRA facility of the Kurchatov Institute. Nuclear Engineering and Design 222, 215–229.
Pro, B.H., Hammerschlag, R., Mazza, P., 2005. Energy and land use impacts of sustainable transportation scenarios. Journal of Cleaner Production 13, 1309–1319.
Richards, M., Shenoy, A., Schultz, K., Brown, L., Fukuie, M., Harvego, E., 2006a. The modular helium reactor for hydrogen production. 15th Pacific Basin Nuclear Conference, Sydney, Australia.
Richards, M., Shenoy, A.S., Venneri, F., Brown, L., Fukuie, M., Harvego, E., 2006b. Modular helium reactor deployment for flexible energy demands. In: HTR2006: 3rd International Topical Meeting on High Temperature Reactor Technology, Johannesburg, South Africa.
Rodriguez, G., Robin, J., Billot, P., Berjon, A., Cachon, L., Carles, P., Leybros, J., Le Naour, F., Pra, F., Terlain, A., Tochon, P., 2006. Development of a key component of the iodine sulfur thermochemical cycle: the SO3 decomposer. WHEC 16. Lyon, France.
Roeb, M., Sattler, C., Kluser, R., Monnerie, N., De Oliveira, L., Konstandopoulos, A.G., Agrafiotis, C., Zaspalis, V.T., Nalbandian, L., Steele, A., Stobbe, P., 2006. Solar hydrogen production by a two-step cycle based on mixed iron oxides. Journal of Solar Energy Engineering Transactions of the ASME 128, 125–133.
Rousseau, P., van Staden, M., 2006. Introduction to the PBMR heat transfer test facility. 3rd International Topical Meeting on High Temperature Reactor Technology: HTR2006, Johannesburg, South Africa.
Sakaba, N., Kasahara, S., Onuki, K., Kunitomi, K., 2007. Conceptual design of hydrogen production system with thermochemical water-splitting iodine–sulphur process utilizing heat from the high-temperature gas-cooled reactor HTTR. International Journal of Hydrogen Energy 32, 4160–4169.
Sakaba, N., Ohashi, H., Takeda, T., 2006. Hydrogen permeation through heat transfer pipes made of Hastelloy XR during the initial 950 °C operation of the HTTR. Journal of Nuclear Materials 353, 42–51.
Sakurai, M., Bilgen, E., Tsutsumi, A., Yoshida, K., 1996. Adiabatic UT-3 thermochemical process for hydrogen production. International Journal of Hydrogen Energy 21, 865–870.
Sandler, S., 1999. Chemical and Engineering Thermodynamics, third ed. Wiley.
Shin, Y., Park, W., Chang, J., Park, J., 2007. Evaluation of the high temperature electrolysis of steam to produce hydrogen. International Journal of Hydrogen Energy 32, 1486–1491.
Shiozawa, S., 2007. Status of Japan's HTR Program. International Congress on Advances in Nuclear Power Plants.
Shiozawa, S., Fujikawa, S., Iyoku, T., Kunitomi, K., Tachibana, Y., 2004. Overview of HTTR design features. Nuclear Engineering and Design 233, 11–21.
Spadoni, A., Lanchi, M., Felici, C., Favuzza, P., Liberatore, R., Tarquini, P., Mazzocchia, C., Tito, C.A., 2007. Kinetic analysis of the catalytic decomposition of hydrogen iodide in the S–I thermochemical cycle. AIChE Annual Meeting, Salt Lake City, UT, US.
Steinberg, M., Cheng, H.C., 1989. Modern and prospective technologies for hydrogen production from fossil fuels. International Journal of Hydrogen Energy 14, 797–820.
Steinfeld, A., 2005. Solar thermochemical production of hydrogen – a review. Solar Energy 78, 603–615.
Stern, N., 2007. The Economics of Climate Change: The Stern Review. Cambridge University Press, London.
Stoots, C.M., O'Brien, J.E., Hartvigsen, J., 2007. Results of recent high temperature coelectrolysis studies at the Idaho National Laboratory. AIChE Annual Meeting 2007, Salt Lake City.
Summers, W., Steimke, J., Steeper, T., Hobbs, D., Colon-Mercado, H., Herman, D., 2007. II.J.2 Hybrid sulfur thermochemical process development. DOE Hydrogen Program FY2007 Annual Progress Report.
Tadokoro, Y., Kajiyama, T., Yamaguchi, T., Sakai, N., Kameyama, H., Yoshida, K., 1997. Technical evaluation of UT-3 thermochemical hydrogen production process for an industrial scale plant. International Journal of Hydrogen Energy 22, 49–56.
Takeda, T., Iwatsuki, J., Inagaki, Y., 2004. Permeability of hydrogen and deuterium of Hastelloy XR. Journal of Nuclear Materials 326, 47–58.
Takizuka, T., Takada, S., Yan, X., Kosugiyama, S., Katanishi, S., Kunitomi, K., 2004. R&D on the power conversion system for gas turbine high temperature reactors. Nuclear Engineering and Design 233, 329–346.
Tarquini, P., 2007. Review and current status of ENEA's hydrogen program. ENEA-HYTHEC workshop Rome, Italy.
Tennenbaum, J., February 10 2006. South Africa's PBMR: world's most versatile nuclear system. EIR Science and Technology, 34–47.
Teo, E.D., Brandon, N.P., Vos, E., Kramer, G.J., 2005. A critical pathway energy efficiency analysis of the UT-3 Cycle. International Journal of Hydrogen Energy 30, 559–564.

Terada, A., Iwatsuki, J., Ishikura, S., Noguchi, H., Kubo, S., Okuda, H., Kasahara, S., Tanaka, N., Ota, H., Onuki, K., Hino, R., 2007. Development of hydrogen production technology by thermochemical water splitting IS process pilot test plan. Journal of Nuclear Science and Technology 44, 477–482.

U.S. Department of Energy Office of Nuclear Energy Science and Technology Nuclear Energy Research Initiative (NERI), 2006. Centralized hydrogen production from nuclear power: infrastructure analysis and test-case design study. WSRC-MS-2005-00693.

United Kingdom Department of Environment Food and Rural Affairs, 2008. Climate change bill. Bill 97.

US DoE, 2007. DoE Hydrogen Program FY2007 annual progress report.

US DoE, GIF, 2002. A technology roadmap for Generation IV nuclear energy systems. GIF-002-00.

US DoE NERI, 2006. Centralized hydrogen production from nuclear power: infrastructure analysis and test-case design study. WSRC-MS-2005-00693.

Venter, P.J., Mitchell, M.N., 2007. Integrated design approach of the pebble BeD modular reactor using models. Nuclear Engineering and Design 237, 1341–1353.

Vitart, X., Carles, P., Anzieu, P., 2008. A general survey of the potential and the main issues associated with the sulfur–iodine thermochemical cycle for hydrogen production using nuclear heat. Progress in Nuclear Energy 50, 401–409.

Wachholz, W., 1988. The present state of the HTR concept based on experience gained from AVR and THTR. Technical committee meeting on design requirements, operation and maintenance of gas-cooled reactors. San Diego, USA, International Atomic Energy Agency.

Wallace, E., Matzie, R., Heiderd, R., Maddalena, J., 2006. From field to factory – taking advantage of shop manufacturing for the pebble bed modular reactor. Nuclear Engineering and Design 236, 445–453.

Weirich, W., Knoche, K., Behr, F., Barnert, H., 1984. Thermochemical processes for water splitting – status and outlook. Nuclear Engineering and Design 78, 285–291.

Wright, S.A., Fuller, R., Noall, J., Vernon, M., Radel, R., Prickard, P.S., 2008a. Supercritical CO2 Brayton cycle compression and control near the critical point. ICAPP08, Anaheim, California, USA.

Wright, S.A., Pickard, P.S., Vernon, M., 2008b. Initial status and test results from a supercritical CO2 Brayton cycle test loop. ICAPP08. Anaheim, California, USA.

Wu, Z., Yu, S., 2007. HTGR projects in China. Nuclear Engineering and Technology 39, 103–110.

Xu, Y., Hu, S., Li, F., Yu, S., 2005. High temperature reactor development in China. Progress in Nuclear Energy 47, 260–270.

Yan, X., Takizuka, T., Takada, S., Kunitomi, K., Minatsuki, I., Mizokami, Y., 2003. Cost and performance design approach for GTHTR300 power conversion system. Nuclear Engineering and Design 226, 351–373.

Yasuno, T., Mitake, S., Ezaki, M., Suzuki, K., 1980. The reactor safety study of experimental multi-purpose VHTR design. Specialists Meeting on Gas-cooled Reactor Safety and Licensing Aspects, Lausanne, Switzerland.

Yildiz, B., Kazimi, M.S., 2006. Efficiency of hydrogen production systems using alternative nuclear energy technologies. International Journal of Hydrogen Energy 31, 77–92.

Zhang, Z., Yu, S., 2002. Future HTGR developments in China after the criticality of the HTR-10. Nuclear Engineering and Design 218, 249–257.

Zhang, Z., Wu, Z., Sun, Y., Li, F., 2006. Design aspects of the Chinese modular high-temperature gas-cooled reactor HTR-PM. Nuclear Engineering and Design 236, 485–490.